RESOLUTION NO. 61-01

A RESOLUTION OF THE CITY COUNCIL OF THE CITY OF RIVIERA BEACH, PALM BEACH COUNTY, FLORIDA, AUTHORIZING THAT THE 2000-2001 BUDGET OF THE POLICE DEPARTMENT SUPPORT SERVICES DIVISION BE AMENDED BY DELETING ONE (1) FULL TIME AND ONE (1) PART-TIME CLERICAL ASSISTANT II CLASSIFIED POSITIONS AND ADDING THE CLASSIFIED POSITION OF SENIOR STAFF ASSISTANT UNDER CLASS TITLE CLERICAL & RELATED AND PROVIDING AN EFFECTIVE DATE.

WHEREAS, the classified position of Senior Staff Assistant has been transferred to the Police Department Support Services Division; and

WHEREAS, the Police Department Support Services Division has three (3) full-time and one (1) part-time classified Clerical Assistant II positions vacant; and

WHEREAS, the Support Services Division of the Police Department's Budget shall be amended by deleting one full-time and one (1) part-time Clerical Assistant II classified positions and adding the classified position of Senior Staff Assistant.

NOW THEREFORE, BE IT RESOLVED BY THE CITY COUNCIL OF THE CITY OF RIVIERA BEACH, PALM BEACH COUNTY, FLORIDA TO AMEND THE SUPPORT SERVICES DIVISION OF THE POLICE DEPARTMENT BUDGET TO WIT:

SECTION 1. DELETE ONE FULL TIME AND ONE PART-TIME POSITIONS

CLASS TITLE	POSITION	RANGE	SALARY
Clerical & Related	Clerical Assistant II	G-15	$17,520-$27,550

ADD ONE POSITION

CLASS TITLE	POSITION	RANGE	SALARY
Clerical & Related	Senior Staff Assistant	G-27	$24,242-$38,288

SECTION 2. That the City Council approve the amended 2000-2001 Support Services Division of the Police Department Budget.

SECTION 3. That this resolution shall take effect upon its passage and approval by City Council.

PASSED AND APPROVED this 2nd **day of** May **2001.**

APPROVED:

MICHAEL D. BROWN
MAYOR

ATTEST:

IE E. WARD, CMC/AAE
CITY CLERK

EDWARD D. RODGERS, CHAIRPERSON

DAVID G. SCHNYER, CHAIR PRO-TEM

DONALD R. WILSON

SYLVIA LEE BLUE

ELIZABETH "LIZ" WADE
COUNCIL MEMBERS

MOTIONED BY: D. Wilson

SECONDED BY: E. Wade

E. RODGERS	aye
D. SCHNYER	aye
D. WILSON	aye
S. BLUE	aye
E. WADE	aye

REVIEWED AS TO LEGAL SUFFICIENCY

Pamela H. Ryan

CITY ATTORNEY
CITY OF RIVIERA BEACH

DATE: 4/25/01

DP:qtp

RESOLUTION NO. 62-01

A RESOLUTION OF THE CITY COUNCIL OF THE CITY OF RIVIERA BEACH, PALM BEACH COUNTY, FLORIDA AUTHORIZING THAT THE PAY & CLASSIFICATION PLAN BE AMENDED BY REGRADING THE CLASSIFIED POSITION OF ENGINEERING TECHNICIAN UNDER CLASS TITLE ENGINEERING & RELATED AND PROVIDING AN EFFECTIVE DATE.

WHEREAS, a request has been made by the Community Development Department to regrade the position of Engineering Technician; and

WHEREAS, the Human Resources Department has advertised the Engineering Technician position numerous of times; and

WHEREAS, the Human Resources Department has been unsuccessful in obtaining sufficient candidates to perform the duties necessary to fill the existing vacancy for over a year; and

WHEREAS, the Engineering Department has incurred additional expenses by utilizing services of an outside consultant to perform the tasks that were performed by our in-house Engineering Technician; and

WHEREAS, in order to confirm if our salary was competitive, a study was completed with cities of comparable size; and

WHEREAS, if the salary increases for the Engineering Technician position, there is a possibility that the City will be able to recruit qualified candidates.

NOW THEREFORE, BE IT RESOLVED BY THE CITY COUNCIL OF THE CITY OF RIVIERA BEACH, PALM BEACH COUNTY, FLORIDA THAT:

SECTION 1: That the City Council approves this resolution to amend the City's Pay and Classification Plan by regrading the position of Engineering Technician as follows:

F R O M

CLASS TITLE	POSITION	RANGE	SALARY
ENGINEERING & RELATED	ENGINEERING TECHNICIAN	G29	$26,629-$42,103

T O

CLASS TITLE	POSITION	RANGE	SALARY
ENGINEERING & RELATED	ENGINEERING TECHNICIAN	G32	$30,683-$48,578

SECTION 2. That this resolution shall take effect upon its passage and adoption by City Council.

PASSED AND APPROVED this 2nd **day of** May, **2001.**

APPROVED:

MICHAEL D. BROWN
MAYOR

EDWARD RODGERS
CHAIRPERSON

DAVID G. SCHNYER
CHAIR PRO-TEM

DONALD R. WILSON

SYLVIA LEE BLUE

ELIZABETH "LIZ" WADE
COUNCIL MEMBERS

ATTEST:

CARRIE E. WARD, CMC/AAE
CITY CLERK

MOTIONED BY: S. Blue

SECONDED BY: E. Wade

E. RODGERS	aye
D. SCHNYER	aye
D. WILSON	aye
S. BLUE	aye
E. WADE	aye

Reviewed as to Legal Sufficiency

CITY ATTORNEY
CITY OF RIVIERA BEACH

DATE: 4/25/01

Dp

CITY OF RIVIERA BEACH
PAY & CLASSIFICATION PLAN
2000 - 2001 (Effective 10/01/00)

CLASS TITLE	PAY RANGE/ GRADE
BUILDING & INSPECTIONS	
Assistant Building Official	M08
Building Official	M09
Building Technician I	G28
Combination Inspector	G38
Community Development Director	M12
EDP Permit Aide	G20
Electrical/Mechanical Inspector	G35
Plans Examiner	G34
Plumbing Inspector	G35
ENGINEERING & RELATED	
City Engineer	M11
Engineering Technician	~~G29~~ G32
FINANCE & ACCOUNTING	
Accountant	G34
Accounting Clerk	G26
Assistant Director of Finance	M09
Budget & Management Specialist	M07
Customer Service Clerk	G18
Finance Director	M12
Payroll Technician	G26
Utility Billing Clerk I	G18
Utility Billing Clerk II	G20
Utility Billing Office Manager	G29
LIBRARY SERVICES	
Library Director	M09
Librarian I	G27
Librarian II	G31
Library Aide	G09
Library Assistant	G20

RANGE	CLASSIFICATION	SALARY
G28	Automotive Mechanic II Building Technician I Carpenter Marina Forklift Operator Senior Equipment Operator	25,404.5158 - 40,145.8466 488.5484 722.0355 12.2137 19.3009
G29	Auto Mechanic III Electrician ~~Engineering Technician~~ Laboratory Technician Utilities Electrician Water Plant Operator II Water/Sewer Plant Mechanic II	26,628.5835 - 42,102.9288 512.0881 809.6717 12.8022 20.2418
G30	Information Services Technician I Property Maintenance Technician	27,913.5836 - 45,045.5142 536.7997 866.2599 13.4200 21.2418
G31	Code Enforcement Analyst Legal Assistant	29,265.1382 - 46,396.6332 562.7912 892.2429 14.0698 22.3061
G32	Electrical & Instrumentation Tech. Engineering Technician GIS CADD Technician I	30,683.2263 - 48,578.2795 590.0621 934.1977 14.7516 23.3549

RESOLUTION NO. 63-01

A RESOLUTION OF THE CITY COUNCIL OF THE CITY OF RIVIERA BEACH, PALM BEACH COUNTY, FLORIDA, APPROVING PAYMENT TO ROCKLINE VAC SYSTEMS OF FT. LAUDERDALE, FL, SOUTHEAST ENVIRONMENTAL SERVICES OF BOCA RATON, FL AND TECHNICAL INSPECTIONS, INC. OF OAKLAND PARK, FL FOR EMERGENCY CLEANING OF STORM SEWERS THROUGHOUT THE CITY OF RIVIERA BEACH IN AN AMOUNT NOT TO EXCEED $100,000.00; AUTHORIZING THE FINANCE DIRECTOR TO APPROPRIATE FUND BALANCE IN THE GENERAL FUND AND TRANSFER FUNDS TO THE RENEWAL & REPLACEMENT FUND; AND PROVIDING AN EFFECTIVE DATE.

WHEREAS, the City of Riviera Beach, Palm Beach County, Florida has several storm sewer systems in need of emergency cleaning; the lack thereof contributes to localized flooding throughout the City; and

WHEREAS, cleaning the storm sewer systems will reduce flooding, but the City does not have the capability to perform this service; and

WHEREAS, Rockline Vac Systems of Ft. Lauderdale, FL, Southeast Environmental Services of Boca Raton, FL and Technical Inspection, Inc. have been mobilized to perform this work.

NOW, THEREFORE, BE IT RESOLVED BY THE CITY COUNCIL OF THE CITY OF RIVIERA BEACH, PALM BEACH COUNTY, FLORIDA, THAT:

SECTION 1. That the Mayor and Director of Finance are authorized to make payment for emergency storm sewer cleaning by Rockline Vac Systems, Southeast Environmental Services and Technical Inspection from the R & R Fund.

SECTION 2. This Resolution shall take effect upon its passage and approval by the City Council.

PASSED AND APPROVED this 2nd **day of** May**, 2001.**

RESOLUTION NO. 63-01

PAGE: 2

APPROVED:

MICHAEL D. BROWN,
MAYOR

(MUNICIPAL SEAL)

ATTEST:

CARRIE E. WARD, CMC/AAE

EDWARD RODGERS
CHAIRPERSON

DAVID G. SCHNYER
CHAIR PRO-TEM

ELIZABETH WADE

SYLVIA LEE BLUE

DONALD R. WILSON
COUNCIL MEMBERS

MOTIONED BY: D. Wilson

SECONDED BY: D. Schnyer

E. RODGERS	aye
E. WADE	aye
G. SCHNYER	aye
S. BLUE	aye
D. WILSON	aye

REVIEWED AS TO LEGAL SUFFICIENCY

CITY ATTORNEY
CITY OF RIVIERA BEACH

DATE: 4/25/01

DJ/mg/03-20-010

RESOLUTION NO. 64-01

A RESOLUTION OF THE CITY COUNCIL OF THE CITY OF RIVIERA BEACH, PALM BEACH COUNTY, FLORIDA, AUTHORIZING THE MAYOR AND CITY CLERK TO TERMINATE THE UNITY OF TITLE FOR PROPERTY FORMERLY OWNED BY WILLIAM G. LASSITER AND HENRY S. HAMILTON, ALSO KNOWN AS INLET MARINA OF PALM BEACH LIMITED, PROVIDING FOR AN EFFECTIVE DATE AND FOR OTHER PURPOSES.

WHEREAS, in July 1988 the City of Riviera Beach required a Unity of Title to restrict the use of several properties within the current Inlet Harbor Marina site. The agreement required that the property be considered as one parcel of land, and prevented the sale of the individual parcels; and

WHEREAS, the property named Inlet Harbor Marina has now been platted as one parcel under a single development thereby removing a number of utility easements; and

WHEREAS, the plat for the property was approved by the City of Riviera Beach September 6, 2000, and the unity of title is no longer required; and

WHEREAS, the unity of title can only be released in writing by the City of Riviera Beach.

NOW, THEREFORE, BE IT RESOLVED BY THE CITY OF RIVIERA BEACH, PALM BEACH COUNTY, FLORIDA AS FOLLOWS:

SECTION 1. The City of Riviera Beach approves the termination of the Unity of Title agreement, a covenant that runs with the land, between William G. Lassiter and Henry S. Hamilton and the City of Riviera Beach.

SECTION 2. This resolution shall take effect immediately upon its passage.

SECTION 3. Inlet Marina of Palm Beach Limited shall record in the Public Record of Palm Beach County the termination of the Unity of Title.

RESOLUTION NO. 64-01
PAGE -2-

PASSED AND APPROVED this 2nd **day of** May **, 2001**

APPROVED:

MAYOR MICHAEL D. BROWN

EDWARD RODGERS, CHAIRPERSON

(MUNICIPAL SEAL)

DAVID G. SCHNYER, CHAIR PRO-TEM

DONALD R. WILSON

ATTEST:

SYLVIA LEE BLUE

CARRIE E. WARD, CMC/AAE
CITY CLERK

ELIZABETH K. WADE
COUNCIL MEMBERS

MOTIONED BY: S. Blue

SECONDED BY: D. Schnyer

E. RODGERS:	aye
D. SCHNYER:	aye
D. WILSON:	aye
S. BLUE:	aye
E. WADE:	aye

REVIEWED AS TO LEGAL SUFFICENCY
City Attorney
City of Riviera Beach

Date: 4/25/01

RESOLUTION NO. 67-01

A RESOLUTION OF THE CITY COUNCIL OF THE CITY OF RIVIERA BEACH, PALM BEACH COUNTY, FLORIDA, AUTHORIZING THE MAYOR AND CITY CLERK TO EXECUTE AN AGREEMENT FOR PROFESSIONAL SERVICES BETWEEN THE CITY OF RIVIERA BEACH AND ALCALDE & FAY, LTD., TO PROVIDE LOBBYIST REPRESENTATION AT THE FEDERAL LEVEL ON BEHALF OF THE CITY OF RIVIERA BEACH; COMPENSATION NOT TO EXCEED $5,000.00 PER MONTH FOR TWELVE MONTHS; THE SAME TO BE PAID FROM CONTRACT SERVICES, ACCOUNT NO. 001-0203-519-0-3101.

BE IT RESOLVED BY THE CITY COUNCIL OF THE CITY OF RIVIERA BEACH, PALM BEACH COUNTY, FLORIDA as follows:

Section 1. That the City Council hereby authorize the Mayor and City Clerk to execute an Agreement for Professional Services between the City of Riviera Beach and Alcalde & Fay, Ltd., to provide lobbyist representation at the federal level on behalf of the City of Riviera Beach.

Section 2. That compensation is not to exceed $5,000.00 per month for twelve months and the City shall reimburse Alcalde & Fay, Ltd. for reasonable expenses incurred at cost in connection with the work performed; the amount is to be paid from Contract Services, Account No. 001-0203-519-0-3101.

Section 3. That a copy of the Agreement for Professional Services between the City of Riviera Beach and Alcalde & Fay, Ltd. shall be attached hereto and made a part of this Resolution.

Section 4. This Resolution shall take effect immediately upon passage and adoption by the City Council.

PASSED and ADOPTED this 2nd **day of** May**, 2001.**

RESOLUTION NO. 67-01

APPROVED:

MICHAEL D. BROWN
MAYOR

(MUNICIPAL SEAL)

EDWARD RODGERS
CHAIRPERSON

DAVID G. SCHNYER
CHAIR PRO-TEM

DONALD R. WILSON

SYLVIA LEE BLUE

ELIZABETH "LIZ" WADE
COUNCILMEMBERS

ATTEST

CARRIE E. WARD, CMC/AAE
CITY CLERK

MOTIONED BY: D. Schnyer

SECONDED BY: D. Wilson

E. RODGERS aye

D. SCHNYER aye

D. WILSON aye

S. BLUE aye

D. WILSON aye

E. WADE

REVIEWED AS TO LEGAL SUFFICIENCY

CITY ATTORNEY
CITY OF RIVIERA BEACH

Date 4/25/01

WEW:mem
4/25/01

AGREEMENT FOR PROFESSIONAL SERVICES BETWEEN THE CITY OF RIVIERA BEACH AND ALCALDE & FAY, LTD.

The following is an agreement between the City of Riviera Beach, hereinafter referred to as "CITY", and the firm of Alcalde & Fay, Ltd., a Virginia corporation, hereinafter referred to as "CONTRACTOR".

WHEREAS, CONTRACTOR has duly qualified experts in the field of public works, transportation, communications, water resources, housing, and Federal grant programs; and

WHEREAS, in the judgment of the Council Members, it is necessary and desirable to employ the services of the CONTRACTOR to assist the CITY with public works, transportation, communications, water resources, housing, and Federal grant programs administered by the Federal government.

NOW, THEREFORE, in consideration of the mutual covenants contained herein, the parties hereto agree as follows:

PART 1 - SPECIFIC PROVISIONS

A. **SERVICES TO BE PROVIDED:** CONTRACTOR will consult and advise, as requested, on public works, transportation, communications, water resources, housing, and Federal grant programs, including but not limited to:

1. Assisting in the development of strategies relating to the governmental agencies who regulate and fund public works, transportation, communications, water resources, and housing programs.

2. Developing strategies to obtain and maximize public works, transportation, water resources, and housing and Federal grant programs.

3. Coordinating funding, legislation and policy-related activities with the United States Congress and federal agencies;

4. Securing appropriate authorizations and funding from the United States Congress and federal agencies to implement the CITY's projects;

5. Maintaining direct and frequent contact with key United States Senators and Representatives;

6. Advocating CITY interests during the United States Legislative and regulatory process;

7. Leading and organizing successful local efforts to obtain funding and beneficial status for the CITY projects; and

8. Providing the CITY with a written report of activities and attending CITY meetings at any time upon the CITY's request.

B. **PAYMENT:** CONTRACTOR'S compensation for the services provided hereunder shall not exceed $5,000.00 per month. The monthly $5,000.00 fee invoice shall be submitted by CONTRACTOR at the first of each month, beginning on May 1, 2001. The CITY shall reimburse the CONTRACTOR for reasonable expenses incurred in connection with CONTRACTOR'S work at actual cost. Expenses that are to be reimbursed include, but not limited to: photocopying, postage, telephone, delivery, and telecopy charges. Expenses will be reimbursed to CONTRACTOR on a monthly basis and will not exceed $100.00 per month. The CITY will make all travel arrangements for the CONTRACTOR. All travel expenses will be incurred only following the approval by the City Manager.

C. **KEY PERSONNEL:** CONTRACTOR has represented to CITY that CITY will have L. A. "Skip" Bafalis, Danielle McBeth, Jim Davenport and Shantrel Brown principals of CONTRACTOR's services, in the performance of CONTRACTOR's duties hereunder, and has relied on that representation as an inducement to entering into this Agreement.

PART II - GENERAL PROVISIONS

A. **ASSIGNMENT AND DELEGATION:** Except as above, neither party hereto shall assign or delegate any interest in or duty under this Agreement without written consent of the other, and no assignment shall be of any force or effect whatsoever unless and until the other party shall have so consented.

B. **STATUS OF CONTRACTOR:** The parties intend that CONTRACTOR, in performing the services hereinafter specified, shall act as an independent contractor and shall have control of the work and the manner in which it is performed. CONTRACTOR is not to be considered an agent or employee of CITY and is not entitled to participate in any pension plan, insurance, bonus, or similar benefits CITY provides its employees.

C. **METHOD AND PLACE OF GIVING NOTICE, SUBMITTING BILLS AND MAKING PAYMENTS:** All notices, bill, and payments shall be made in writing and may be given by personal delivery or by mail. Notices, bills, and payments sent by mail should be addressed as follows:

CITY: WILLIAM WILKINS
CITY MANAGER
600 WEST BLUE HERON BOULEVARD
RIVIERA BEACH, FL 33404
(561) 845-4010

CONTRACTOR: ALCALDE & FAY
2111 WILSON BLVD., 8th FLOOR
ARLINGTON, VA 22201
(703) 841-0626

D. **NON-DISCRIMINATION:** CONTRACTOR shall comply with all applicable federal, state, and local laws, rules, and regulations in regard to non-discrimination in employment because of race, color, ancestry, national origin, religion, sex, age, marital status, medical condition, or physical or mental disability.

E. **TERM OF AGREEMENT:** This Agreement shall become effective on May 1, 2001 and shall terminate on April 30, 2002 or upon 30 day's notice by either party with or without cause.

F. **JURISDICTION:** This Agreement and performance hereunder and all suits and special proceedings hereunder shall be construed in accordance with the laws of

the State of Florida. In any action, special proceeding or other proceeding that may be brought arising out of, in connection with, or by reason of this Agreement, the laws of the State of Florida shall be applicable and shall govern to the exclusion of the law of any other forum, without regard to the jurisdiction in which the action or special proceeding may be instituted.

IN WITNESS WHEREOF, the parties hereto have caused this Agreement to be executed this 02 day of May, 2001.

ATTEST:

City Clerk

CITY OF RIVIERA BEACH

MAYOR

REVIEWED FOR LEGAL SUFFICIENCY

CITY ATTORNEY
CITY OF RIVIERA BEACH

DATE: 4/26/01

ALCALDE & FAY, LTD.

Witnesses:

5. RESOLUTION NO. 64-01 - A RESOLUTION OF THE CITY COUNCIL OF THE CITY OF RIVIERA BEACH, PALM BEACH COUNTY, FLORIDA, AUTHORIZING THE MAYOR AND CITY CLERK TO TERMINATE THE UNITY OF TITLE FOR PROPERTY FORMERLY OWNED BY WILLIAM G. LASSITER AND HENRY S. HAMILTON, ALSO KNOWN AS INLET MARINA OF PALM BEACH LIMITED, PROVIDING FOR AN EFFECTIVE DATE AND FOR OTHER PURPOSES.

City Clerk Ward read the referenced resolution into the record.

Mary McKinney (CRBCD) stated concerns regarding the termination.

Motion was made by Councilperson Blue and seconded by Chair Pro-Tem Schnyer to approve. MOTION (T1.2880)

Discussion ensued.

Upon a roll call, the vote was unanimous. APPROVED

6. RESOLUTION NO. 65-01 - A RESOLUTION OF THE CITY COUNCIL OF THE CITY OF RIVIERA BEACH, PALM BEACH COUNTY, FLORIDA, OPPOSING THE DEVELOPMENT OF ANY AND ALL DWELLINGS ON LITTLE MUNYON ISLAND IN PALM BEACH COUNTY. DELETED

7. RESOLUTION NO. 66-01 - A RESOLUTION OF THE CITY COUNCIL OF THE CITY OF RIVIERA BEACH, PALM BEACH COUNTY, FLORIDA, AUTHORIZING THE MAYOR AND CITY CLERK TO EXECUTE A QUIT CLAIM DEED RELEASING TO THE STATE OF FLORIDA ITS INTEREST IN THE SUBMERGED LAND LOCATED IMMEDIATELY EAST OF THE ABANDONED OLD SLIP ROAD RIGHT-OF-WAY; AND PROVIDING AN EFFECTIVE DATE. DELETED

8. DISCUSSION ON A SITE PLAN APPLICATION FROM LAST FLORIDIAN TO CONSTRUCT A 34,500 SQUARE FOOT OFFICE AND MANUFACTURING FACILITY ON A 2.2 ACRE PARCEL LOCATED ON LOT 12 IN INTERSTATE INDUSTRIAL PARK AT INTERSTATE PARK ROAD, SOUTH, AND GARDEN ROAD.

City Clerk Ward read into the record the above-referenced request for approval.

RESOLUTION NO. 68-01

A RESOLUTION OF THE CITY COUNCIL OF THE CITY OF RIVIERA BEACH, PALM BEACH COUNTY, FLORIDA, AWARDING THE BID FOR BLUE HERON BEAUTIFICATION PHASE II (I-95 TO GARDEN ROAD) TO B&A CONSTRUCTION SERVICES GROUP, INC. AND AUTHORIZING THE FINANCE DIRECTOR TO TRANSFER $30,049.82 FROM GENERAL FUND BALANCE ACCOUNT NO. 001-00-399999 TO ACCOUNT NO. 109-0714-5150-3106.

WHEREAS, the City of Riviera Beach solicited bids to install landscaping and irrigation on Blue Heron Boulevard from I-95 to Garden Road; and

WHEREAS, the bids were opened on April 6, 2001; and

WHEREAS, B & A Construction Services Group, Inc. is the lowest bidder and meets the minimum qualification.

NOW THEREFORE, BE IT RESOLVED BY THE CITY OF RIVIERA BEACH, PALM BEACH COUNTY, FLORIDA AS FOLLOWS:

SECTION 1. The bid submitted by B & A Construction Services Group, Inc. for Blue Heron Beautification Phase II Project in the amount of $202,464.53 is accepted.

SECTION 2. The City Manager is hereby authorized to approve change orders in the amount not to exceed 10% of the contract price.

SECTION 3. The Finance Director is authorized to transfer $30,049.82 from General Fund Balance Account No. 001-00-399999 to Account No. 109-0714-5150-3106.

PASSED AND APPROVED this 16th **day of** May, **2001**

APPROVED:

MICHAEL D. BROWN, MAYOR

EDWARD RODGERS, CHAIRPERSON

DAVID SCHNYER, CHAIR PRO-TEM

{MUNICIPAL SEAL}

DONALD R. WILSON

SYLVIA LEE BLUE

ATTEST:

ELIZABETH "LIZ" WADE
COUNCIL MEMBERS

CARRIE E. WARD, CMC/AAE
CITY CLERK

Motioned By E. Wade
Seconded By D. Schnyer

E. Rodgers	aye
D. Schnyer	aye
D. Wilson	absent
S. Blue	aye
L. Wade	aye

Reviewed as to Legal Sufficiency

City Attorney
City of Riviera Beach
Date: 5/3/01

/ljs

RESOLUTION NO. 4133

A RESOLUTION OF THE CITY COUNCIL OF THE CITY OF RIVIERA BEACH, PALM BEACH COUNTY, FLORIDA IN MEMORY OF OUR OWN, EMPLOYEE NO. 4133, MR. BOBBY L. MACK, SR. AND PROVIDING AN EFFECTIVE DATE FOR DISSOLUTION OF SAID NUMBER.

WHEREAS, **love** works in ways that are wondrous and strange, there is nothing in life that **love** cannot change; and

WHEREAS, throughout a career of public service, he earned the respect, admiration, and high regard of all of those with whom he came in contact; and

WHEREAS, commencing January 24, 1994 through March 1, 2001, Bobby L. Mack, Sr. served as a faithful employee of the City of Riviera Beach, in **Civil Drug Court** as **Program Coordinator**; and

WHEREAS, he was a servant to those in need of rehabilitation services. He was dedicated, committed and devoted untiringly hours to a system he truly believed in. He contributed to the advancement of many community citizens; he was caring and conscientious. He demonstrated strong attributes, a man of many talents, he desired to be a police officer once; he developed a desire to be true and faithful to his skills and abilities. His charismatic attitude prompted his desire and he was once recommended to serve as Assistant City Manager. He was a servant of the people, wherever he fitted in.

WHEREAS, he was a servant to those in need and received numerous awards & accolades from the Governor's office for his untiring contributions he so graciously provided to the community.

NOW THEREFORE, BE IT RESOLVED THAT THE CITY OF RIVIERA BEACH MAYOR AND CITY COUNCIL AND THE CITIZENRY OF THE COMMUNITY OF THE CITY OF RIVIERA BEACH, PALM BEACH COUNTY, FLORIDA extends to the family members of *Mr. Bobby L. Mack, Sr.* our sincere condolences.

BE IT FURTHER RESOLVED THAT THIS ORIGINAL RESOLUTION BE PRESENTED TO THE FAMILY OF MR. BOBBY L. MACK, SR. AND THAT THE CITY CLERK SHALL HEREBY FILE A COPY INTO THE OFFICIAL RECORDS OF THE CITY.

I HEREBY BOW IN HUMBLE SUBMISSION AND PUT TO REST CITY OF RIVIERA BEACH'S EMPLOYEE NO 4133 AND HEREBY ATTEST THAT THIS NUMBER SHALL BE AT REST.

DONE THIS DAY OF 28 day of APRIL 2001.

APPROVED:

MICHAEL D. BROWN
MAYOR

EDWARD RODGERS
CHAIRPERSON

ATTEST:

CARRIE E. WARD, CMC/AAE
CITY CLERK

DAVID G. SCHNYER
CHAIR PRO TEM

DONALD R. WILSON

Sylvia Lee Blue

SYLVIA LEE BLUE

Elizabeth Wade

ELIZABETH "LIZ" WADE
COUNCILMEMBERS

MOTIONED BY: S. Blue

SECONDED BY: D. Schnyer

E RODGERS: aye

D. SCHNYER: aye

D. WILSON: aye

S. BLUE: aye

E. WADE: aye

RESOLUTION NO. 69-01

A RESOLUTION OF THE CITY COUNCIL OF THE CITY OF RIVIERA BEACH, PALM BEACH COUNTY, FLORIDA, AUTHORIZING THE PURCHASE AND INSTALLATION OF THE ARMOR SCREEN WIND ABATEMENT SYSTEM FROM ARMOR SCREEN COMPANY OF RIVIERA BEACH, A SOLE SOURCE COMPANY, IN THE AMOUNT OF $32,080.00 FOR THE CITY HALL ADMINISTRATIVE BUILDING AND $20,193.00 FOR THE LIBRARY, FOR A TOTAL COST OF $52,273.00; AUTHORIZING THE MAYOR AND FINANCE DIRECTOR TO MAKE PAYMENT FROM THE CAPITAL IMPROVEMENT FUND 305-0203-5190-4602 FOR SAME.

WHEREAS, the City Hall Administrative Building and Library are in need of hurricane protection; and

WHEREAS, the City could minimize the amount of wind damage caused by a hurricane if window protection is installed on the City Hall Administrative Building and Library.

NOW, THEREFORE BE IT RESOLVED BY THE CITY COUNCIL OF THE CITY OF RIVIERA BEACH, FLORIDA, THAT:

Section 1: The purchase and installation of the Armor Screen Wind Abatement System for the City Hall Administrative Building and Library is hereby approved.

Section 2: The City Council authorizes staff to purchase and install window protection for the City Hall Administrative Building and Library from Armor Screen a sole source company of Riviera Beach, in the amount of $52,273.00.

Section 3: The Mayor and Finance Director are authorized to make payment of $52,273.00 from the Capital Improvement Fund 305-0203-5190-4602 for same.

Section 4: This resolution shall take effect upon its passage and adoption by the City Council.

PASSED and APPROVED this 16th **day of** May**, 2001.**

APPROVED RESOLUTION NO. 69-01

MICHAEL BROWN, MAYOR

EDWARD RODGERS, CHAIR PERSON

(MUNICIPAL SEAL)

DAVID SCHNYER, CHAIR PRO-TEM

ATTEST:

DONALD R. WILSON

SYLVIA LEE BLUE

CARRIE, WARD, CMC/AAE
CITY CLERK

ELIZABETH "LIZ" WADE
COUNCIL MEMBERS

MOTIONED BY: E. Wade

SECONDED BY: D. Schnyer

E. RODGERS: aye

D. SCHNYER: aye

D. WILSON: absent

S. BLUE: aye

E. WADE: aye

TFP 5/01/01

REVIEWED AS TO LEGAL SUFFICIENCY

CITY ATTORNEY
CITY OF RIVIERA BEACH

DATE: 5/4/01

CITY OF RIVIERA BEACH

600 WEST BLUE HERON BLVD. • RIVIERA BEACH, FLORIDA 33404
(561) 845-4104 (561) 845-4137

OFFICE OF
FIRE CHIEF

Date: April 24, 2002

To: Veronique Rellford, Director of Purchasing
Lal Samadi, City Engineer
Kenneth J. Loihle, Building Official
Donald Jacobovitz, Director of Public Works

From: Troy F. Perry, Fire Chief

RE: Armor Screen

Attached, please find copies of the following information regarding the Armor Screen hurricane protection installed on the library and general administration building:

1. Care and deployment instructions, and installation diagram for the library and general administration building,
2. Load testing certification from Dunkelberger Engineering & Testing, Inc.
3. Straight Screen Load Calculations

The original documents will be filed in the City Clerk's office with the original resolution.

Should you have any questions, please contact my office at your convenience.

TFP

C: Carrie E. Ward, City Clerk

69-01

ACTIVE PALLBEARERS

FAMILY AND FRIENDS

FLOWER ATTENDANTS

FRIENDS AND CO-WORKERS

IN APPRECIATION

We, the Family of MR. BOBBY MACK SR., are grateful for every expression of love and sympathy shown during these hours of bereavement. The prayers, flowers, visits and phone calls have helped make our burden of grief much easier to bear.

Special thanks to Pastor and First Lady Masters, New Macedonia Church Family, co-workers of city and county Law Enforcement and neighbors.

May ALMIGHTY GOD bless each of you in a very special way.

INTERMENT

FLORIDA NATIONAL VETERANS CEMETERY
BUSHNELL, FLORIDA
MONDAY, APRIL 30, 2001

ARRANGEMENTS ENTRUSTED TO:

STEVENS BROTHERS FUNERAL HOME
1803 N. TAMARIND AVENUE
WEST PALM BEACH, FLORIDA 33407
561-833-5526

HOMEGOING SERVICES FOR MR. BOBBY L. MACK SR.

SATURDAY, APRIL 28, 2001
12 :00 NOON

NEW MACEDONIA BAPTIST CHURCH
748 – West 9th Street
RIVIERA BEACH, FLORIDA

REV. THOMAS MASTERS , PASTOR

MOTIONED BY:	S. Blue
SECONDED BY:	D. Schnyer
E. RODGERS	aye
D. SCHNYER	aye
D. WILSON	absent
S. BLUE	aye
E. WADE	aye

REVIEWED AS TO LEGAL SUFFICIENCY

Pamela H. Rogers
CITY ATTORNEY
CITY OF RIVIERA BEACH

DATE: 5/8/01

/jt
04-28-01

LEASE WITH OPTION TO PURCHASE AGREEMENT

Lessee
City of Riviera Beach
600 W. Blue Heron Blvd.
Riviera Beach, Florida 33404

Lessor
Kansas State Bank of Manhattan
1010 Westloop, P.O. Box 69
Manhattan, Kansas 66505-0069

DUPLICATE ORIGINAL

Dated as of January 24, 2001

This Lease With Option to Purchase Agreement dated as of the date listed above is between Lessor and Lessee listed directly above. Lessor desires to lease the Equipment described in Exhibit "A" to Lessee and Lessee desires to lease the Equipment from Lessor subject to the terms and conditions of this Agreement which are set forth below.

I. Definitions:

Section 1.01. Definitions. The following terms will have the meanings indicated below unless the context clearly requires otherwise:
"Additional Schedule" refers to the proper execution of additional Schedules to Exhibit A, Exhibit B, Exhibit C and Exhibit E as well as other exhibits or documents that may be required by the Lessor all of which relate to a lease of additional Equipment.
"Agreement" means this Lease with Option to Purchase Agreement and all Exhibits attached hereto.
"Budget Year" means the Lessee's fiscal year.
"Commencement Date" is the date when Lessee's obligation to pay rent begins.
"Equipment" means all of the items of Equipment listed on Exhibit "A" and all replacements, restorations, modifications and improvements.
"Lessee" means the entity listed above as Lessee and which is leasing the Equipment from Lessor under the provisions of this Agreement.
"Lessor" means the entity originally listed above as Lessor or any of its assignees.
"Lease Term" means the Original Term and all Renewal Terms.
"Original Term" means the period from the Commencement Date until the end of the Budget Year of Lessee.
"Renewal Term" means the annual term which begins at the end of the Original Term and which is simultaneous with Lessee's Budget Year.
"Rental Payments" means the payments Lessee is required to make under this Agreement as set forth on Exhibit "B".
"State" means the state in which Lessee is located.

II. Lessee Warranties

Section 2.01. Lessee represents, warrants and covenants as follows for the benefit of Lessor or its assignees:

(a) Lessee is an "issuer of tax exempt obligations" because Lessee is the State or a political subdivision of the State within the meaning of Section 103(a) of the Internal Revenue Code of 1986, as amended, (the "Code") or because Lessee is a constituted authority or district authorized to issue obligations on behalf of the State or political subdivision of the State within the meaning of Treasury Regulation 1.103-1(b).
(b) Lessee is authorized under the Constitution and laws of the State to enter into this Agreement, and has used such authority to properly execute and deliver this Agreement. Lessee has followed all proper procedures of its governing body in executing this Agreement. The Officer of Lessee executing this Agreement has the authority to execute and deliver this Agreement. This Agreement constitutes a legal, valid, binding and enforceable obligation of the Lessee in accordance with its terms.
(c) Lessee has complied with all statutory laws and regulations that may be applicable to the execution of this Agreement.
(d) Lessee shall use the Equipment only for essential, traditional government purposes.
(e) Should the IRS disallow the tax-exempt status of the Interest Portion of the Rental Payments as a result of the failure of the Lessee to use the Equipment for governmental purposes, then Lessee shall be required to pay additional sums to the Lessor or its assignees so as to bring the after tax yield to the same level as the Lessor or its assignees would attain if the transaction continued to be tax-exempt.
(f) Should the Lessee cease to be an issuer of tax exempt obligations or if the obligation of Lessee created under this Agreement ceases to be a tax exempt obligation for any reason, then Lessee shall be required to pay additional sums to the Lessor or its assignees so as to bring the after tax yield on this Agreement to the same level as the Lessor or its assignees would attain if the transaction continued to be tax-exempt.
(g) Lessee has never non-appropriated funds under an Agreement similar to this Agreement.
(h) Lessee will submit to the Secretary of the Treasury an information reporting statement as required by the Code.
(i) Upon request by Lessor, Lessee will provide Lessor with current financial statements, reports, budgets or other relevant fiscal information.
(j) Lessee shall retain the Equipment free of any hazardous substances as defined in the Comprehensive Environmental Response, Compensation and Liability Act, 42 U.S.C. 9601 et. seq. as amended and supplemented.
(k) Lessee presently intends to continue this Agreement for the Original Term and all Renewal Terms as set forth on Exhibit "B" hereto. The official of Lessee responsible for budget preparation will include in the budget request for each Budget Year the Rental Payments to become due in such Budget Year, and will use all reasonable and lawful means available to secure the appropriation of money for such Budget Year sufficient to pay the Rental Payments coming due therein. Lessee reasonably believes that moneys can and will lawfully be appropriated and made available for this purpose.

Section 2.02. Escrow Agreement. In the event both Lessor and Lessee mutually agree to utilize an Escrow Account, then immediately following the execution and delivery of this Agreement, Lessor and Lessee agree to execute and deliver and to cause Escrow Agent to execute and deliver the Escrow Agreement. This Agreement shall take effect only upon execution and delivery of the Escrow Agreement by the parties thereto. Lessor shall deposit or cause to be deposited with the Escrow agent for credit to the Equipment Acquisition Fund the sum of $N/A, which shall be held, invested and disbursed in accordance with the Escrow Agreement.

III. Acquisition of Equipment, Rental Payments and the Purchase Option Price

Section 3.01. Acquisition and Acceptance. Lessee shall be solely responsible for the ordering of the Equipment and for the delivery and installation of the Equipment. Execution of the Acceptance Certificate by an employee, official or agent of the Lessee having managerial, supervisory or procurement authority with respect to the Equipment shall constitute acceptance of the Equipment on behalf of the Lessee.

Section 3.02. Rental Payments. Lessee shall pay Rental Payments exclusively to Lessor or its assignees in lawful, legally available money of the United States of America. The Rental Payments shall be sent to the location specified by the Lessor or its assignees. The Rental Payments shall constitute a current expense of the Lessee and shall not constitute an indebtedness of the Lessee. Lessor shall have the option to charge interest at the highest lawful rate on any Rental Payment received later than the due date for the number of days that the Rental Payment(s) were late. Lessor shall also have the option, on monthly payments only, to charge a late fee of up to 10% of the monthly Rental Payment that is past due. The Rental Payments will be payable without notice or demand.

Section 3.03. Rental Payments Unconditional. Except as provided under Section 4.01, THE OBLIGATIONS OF LESSEE TO MAKE RENTAL PAYMENTS AND TO PERFORM AND OBSERVE THE OTHER COVENANTS CONTAINED IN THIS AGREEMENT SHALL BE ABSOLUTE AND UNCONDITIONAL IN ALL EVENTS WITHOUT ABATEMENT, DIMINUTION, DEDUCTION, SET-OFF OR DEFENSE.

Section 3.04. Purchase Option Price. Upon thirty (30) days written notice, Lessee shall have the option to pay, in addition to the Rental Payment, the corresponding Purchase Option Price which is listed on the same line on Exhibit B. If Lessee chooses this option and pays the Purchase Option Price to Lessor then Lessor will transfer any and all of it's rights, title and interest in the Equipment to Lessee.

Section 3.05. Lease Term. The Lease Term of the Agreement shall be the Original Term and all Renewal Terms until all the Rental Payments are paid as set forth on Exhibit B except as provided under Section 4.01 and Section 9.01 below. If, after the end of the budgeting process which occurs at the end of the Original Term or any Renewal Term, Lessee has not non-appropriated as provided for in this Agreement then the Lease Term shall be extended into the next Renewal Term and the Lessee shall be obligated to make all the Rental Payments that shall be due during such Renewal Term.

Section 3.06. Disclaimer of Warranties. LESSOR MAKES NO WARRANTY OR REPRESENTATION, EITHER EXPRESS OR IMPLIED, AS TO THE VALUE, DESIGN, CONDITION, MERCHANTABILITY, FITNESS FOR PARTICULAR PURPOSE OR ANY OTHER WARRANTY WITH RESPECT TO THE EQUIPMENT. LESSOR SHALL NOT BE LIABLE FOR ANY INCIDENTAL, INDIRECT, SPECIAL OR CONSEQUENTIAL DAMAGE ARISING OUT OF THE INSTALLATION, OPERATION, POSSESSION, STORAGE OR USE OF THE EQUIPMENT BY LESSEE.

IV. Non-Appropriation

Section 4.01. Non-Appropriation. If insufficient funds are available in Lessee's budget for the next Budget Year to make the Rental Payments for the next Renewal Term and the funds to make such Rental Payments are otherwise unavailable by any lawful means whatsoever, then Lessee shall have the option to non-appropriate the funds to pay the Rental Payments for the next Renewal Term. Lack of a sufficient appropriation shall be evidenced by the passage of an ordinance or resolution by the governing body of Lessee specifically prohibiting Lessee from performing its obligations under this Agreement and from using any moneys to pay the Rental Payments due under this Agreement for a designated Budget Year and all subsequent Budget Years. If Lessee chooses this option, then all obligations of the Lessee under this Agreement regarding Rental Payments for all remaining Renewal Terms shall be terminated at the end of the then current Original Term or Renewal Term without penalty or liability to the Lessee of any kind provided that if Lessee has not delivered possession of the Equipment to Lessor as provided herein and conveyed to Lessor or released its interest in the Equipment by the end of the last Budget Year for which Rental Payments were paid, the termination shall nevertheless be effective but Lessee shall be responsible for the payment of damages in an amount equal to the amount of the Rental Payments thereafter coming due under Exhibit "B" which are attributable to the number of days after such Budget Year during which Lessee fails to take such actions and for any other loss suffered by Lessor as a result of Lessee's failure to take such actions as required. Lessee shall immediately notify the Lessor as soon as the decision to non-appropriate is made. If such non-appropriation occurs, then Lessee shall deliver the Equipment to Lessor or to a location designated by Lessor at Lessee's expense. Lessee shall be liable for all damage to the Equipment other than normal wear and tear. If Lessee fails to deliver the Equipment to Lessor, then Lessor may enter the premises where the Equipment is located and take possession of the Equipment and charge Lessee for costs incurred.

V. Insurance, Damage, Insufficiency of Proceeds

Section 5.01. Insurance. Lessee shall maintain both casualty insurance and liability insurance at its own expense with respect to the Equipment. Lessee shall be solely responsible for selecting the insurer(s) and for making all premium payments and ensuring that all policies are continuously kept in effect during the period when Lessee is required to make Rental Payments. Lessee shall provide Lessor with a Certificate of Insurance which lists the Lessor and/or assigns as a loss payee and an additional insured on the policies with respect to the Equipment.

(a) Lessee shall insure the Equipment against any loss or damage by fire and all other risks covered by the standard extended coverage endorsement then in use in the State and any other risks reasonably required by Lessor in an amount at least equal to the then applicable Purchase Option Price of the Equipment. Alternatively, Lessee may insure the Equipment under a blanket insurance policy or policies.

(b) The liability insurance shall insure Lessor from liability and property damage in any form and amount satisfactory to Lessor.

(c) Lessee may self-insure against the casualty risks and liability risks described above. If Lessee chooses this option, Lessee must furnish Lessor with a certificate and/or other documents which evidences such coverage.

(d) All insurance policies issued or affected by this Section shall be so written or endorsed such that the Lessor and its assignees are named additional insureds and loss payees and that all losses are payable to Lessee and Lessor or its assignees as their interests may appear. Each policy issued or affected by this Section shall contain a provision that the insurance company shall not cancel or materially modify the policy without first giving thirty (30) days advance notice to Lessor or its assignees. Lessee shall furnish to Lessor certificates evidencing such coverage throughout the Lease Term.

Section 5.02. Damage to or Destruction of Equipment. Lessee assumes the risk of loss or damage to the Equipment. If the Equipment or any portion thereof is lost, stolen, damaged, or destroyed by fire or other casualty, Lessee will immediately report all such losses to all possible insurers and take the proper procedures to attain all insurance proceeds. At the option of Lessor, Lessee shall either (1) apply the Net Proceeds to replace, repair or restore the Equipment or (2) apply the Net Proceeds to the applicable Purchase Option Price. For purposes of this Section and Section 5.03, the term Net Proceeds shall mean the amount of insurance proceeds collected from all applicable insurance policies after deducting all expenses incurred in the collection thereof.

Section 5.03. Insufficiency of Net Proceeds. If there are no Net Proceeds for whatever reason or if the Net Proceeds are insufficient to pay in full the cost of any replacement, repair, restoration, modification or improvement of the Equipment, then Lessee shall, at the option of Lessor, either (1) complete such replacement, repair, restoration, modification or improvement and pay any costs thereof in excess of the amount of the Net Proceeds or (2) apply the Net Proceeds to the Purchase Option Price and pay the deficiency, if any, to the Lessor.

Section 5.04. Lessee Negligence. Lessee assumes all risks and liabilities, whether or not covered by insurance, for loss or damage to the Equipment and for injury to or death of any person or damage to any property whether such injury or death be with respect to agents or employees of Lessee or of third parties, and whether such property damage be to Lessee's property or the property of others (including, without limitation, liabilities for loss or damage related to the release or threatened release of hazardous substances under the Comprehensive Environmental Response, Compensation and Liability Act, the Resource Conservation and Recovery Act or similar or successor law or any State or local equivalent now existing or hereinafter enacted which in any manner arise out of or are incident to any possession, use, operation, condition or storage of any Equipment by Lessee) which is proximately caused by the negligent conduct of Lessee, its officers, employees and agents. Lessee hereby assumes responsibility for and agrees to reimburse Lessor for all liabilities, obligations, losses, damages, penalties, claims, actions, costs and expenses (including reasonable attorneys' fees) of whatsoever kind and nature, imposed on, incurred by or asserted against Lessor that in any way relate to or arise out of a claim, suit or proceeding, based in whole or in part upon the negligent conduct of Lessee, its officers, employees and agents, to the maximum extent permitted by law.

VI. Title and Security Interest

Section 6.01. Title. Title to the Equipment shall vest in Lessee when Lessee acquires and accepts the Equipment. Title to the Equipment will automatically transfer to the Lessor in the event Lessee non-appropriates under Section 4.01 or in the event Lessee defaults under Section 9.01. In either of such events, Lessee shall execute and deliver to Lessor such documents as Lessor may request to evidence the passage of legal title to the Equipment to Lessor.

Section 6.02. Security Interest. To secure the payment of all Lessee's obligations under this Agreement, Lessee hereby grants to Lessor a security interest under the Uniform Commercial Code constituting a first lien on the Equipment described more fully on Exhibit "A". The security interest established by this section includes not only all additions, attachments, repairs and replacements to the Equipment but also all proceeds therefrom.

VII. Assignment

Section 7.01. Assignment by Lessor. All of Lessor's rights, title and/or interest in and to this Agreement may be assigned and reassigned in whole or in part to one or more assignees or sub-assignees (including a Registered Owner for Lease Participation Certificates) by Lessor at any time without the consent of Lessee. No such assignment shall be effective as against Lessee until the assignor shall have filed with Lessee written notice of assignment identifying the assignee. Lessee shall pay all Rental Payments due hereunder relating to such Equipment to or at the direction of Lessor or the assignee named in the notice of assignment. Lessee shall keep a complete and accurate record of all such assignments.

Section 7.02. Assignment by Lessee. None of Lessee's right, title and interest under this Agreement and in the Equipment may be assigned by Lessee unless Lessor approves of such assignment in writing before such assignment occurs and only after Lessee first obtains an opinion from nationally recognized counsel stating that such assignment will not jeopardize the tax-exempt status of the obligation.

VIII. Maintenance of Equipment

Section 8.01. Lessee shall keep the Equipment in good repair and working order. Lessor shall have no obligation to inspect, test, service, maintain, repair or make improvements or additions to the Equipment under any circumstances. Lessee will be liable for all damage to the Equipment, other than normal wear and tear, caused by Lessee, its employees or its agents. Lessee shall pay for and obtain all permits, licenses and taxes necessary for the installation, operation, possession, storage or use of the Equipment. If the Equipment includes any titled vehicle(s), then Lessee is responsible for obtaining such title(s) from the State and also for ensuring that Lessor is listed as First Lienholder on all of the title(s). Lessee shall not use the Equipment to haul, convey or transport hazardous waste as defined in the Resource Conservation and Recovery Act, 42 U.S.C. 6901 et. seq. Lessee shall not during the term of this Agreement create, incur or assume any levies, liens or encumbrances of any kind with respect to the Equipment except those created by this Agreement. Lessee agrees that Lessor or its Assignee may execute any additional documents including financing statements, affidavits, notices, and similar instruments, for and on behalf of Lessee which Lessor deems necessary or appropriate to protect Lessor's interest in the Equipment and in this Agreement. The Equipment is and shall at all times be and remain personal property. Lessee shall allow Lessor to examine and inspect the Equipment at all reasonable times.

IX. Default

Section 9.01. Events of Default defined. The following events shall constitute an "Event of Default" under this Agreement:

(a) Failure by Lessee to pay any Rental Payment listed on Exhibit "B" for fifteen (15) days after such payment is due according to the Payment Date listed on Exhibit "B".

(b) Failure to pay any other payment required to be paid under this Agreement at the time specified herein and a continuation of said failure for a period of fifteen (15) days after written notice by Lessor that such payment must be made. If Lessee continues to fail to pay any payment after such period, then Lessor may, but will not be obligated to, make such payments and charge Lessee for all costs incurred plus interest at the highest lawful rate.

(c) Failure by Lessee to observe and perform any warranty, covenant, condition, promise or duty under this Agreement for a period of thirty (30) days after written notice specifying such failure is given to Lessee by Lessor, unless Lessor agrees in writing to an extension of time. Lessor will not unreasonably withhold its consent to an extension of time if corrective action is instituted by Lessee. Subsection (c) does not apply to Rental Payments and other payments discussed above.

(d) Any statement, material omission, representation or warranty made by Lessee in or pursuant to this Agreement which proves to be false, incorrect or misleading on the date when made regardless of Lessee's intent and which materially adversely affects the rights or security of Lessor under this Agreement.

(e) Any provision of this Agreement which ceases to be valid for whatever reason and the loss of such provision would materially adversely affect the rights or security of Lessor.

(f) Lessee admits in writing its inability to pay its obligations. Lessee defaults on one or more of its other obligations. Lessee applies or consents to the appointment of a receiver or a custodian to manage its affairs. Lessee makes a general assignment for the benefit of creditors.

Section 9.02. Remedies on Default. Whenever any Event of Default exists, Lessor shall have the right to take one or any combination of the following remedial steps:

With or without terminating this Agreement, Lessor may declare all Rental Payments and other amounts payable by Lessee hereunder to the end of the then current Budget Year to be immediately due and payable.

With or without terminating this Agreement, Lessor may require Lessee at Lessee's expense to redeliver any or all of the Equipment to Lessor to a location specified by Lessor. Such delivery shall take place within fifteen (15) days after the event of default occurs. If Lessee fails to deliver the Equipment, Lessor may enter the premises where the Equipment is located and take possession of the Equipment and charge Lessee for cost incurred. Notwithstanding that Lessor has taken possession of the Equipment, Lessee shall still be obligated to pay the remaining Rental Payments due up until the end of the then current Original Term or Renewal Term. Lessee will be liable for any damage to the Equipment caused by Lessee or its employees or agents.

(c) Lessor may take whatever action at law or in equity that may appear necessary or desirable to enforce its rights.

Section 9.03. No Remedy Exclusive. No remedy herein conferred upon or reserved to Lessor is intended to be exclusive and every such remedy shall be cumulative and shall be in addition to every other remedy given under this Agreement now or hereafter existing at law or in equity. No delay or omission to exercise any right or power accruing upon any default shall impair any such right or shall be construed to be a waiver thereof.

DUPLICATE ORIGINAL

X. Miscellaneous

Section 10.01. Notices. All notices shall be sufficiently given and shall be deemed given when delivered or mailed by registered mail, postage prepaid, to the parties at their respective places of business as first set forth herein or as the parties shall designate hereafter in writing.

Section 10.02. Binding Effect. This Agreement shall inure to the benefit of and shall be binding upon Lessee and Lessor and their respective successors and assigns.

Section 10.03. Severability. In the event any provision of this Agreement shall be held invalid or unenforceable by any court of competent jurisdiction, such holding shall not invalidate or render unenforceable any other provision hereof.

Section 10.04. Amendments, Addenda, Changes or Modifications. This Agreement may be amended, added to, changed or modified by written agreement duly executed by Lessor and Lessee.

Section 10.05. Execution in Counterparts. This Agreement may be simultaneously executed in several counterparts, each of which shall be an original and all of which shall constitute but one and the same instrument.

Section 10.06. Captions. The captions or headings in this Agreement do not define, limit or describe the scope or intent of any provisions or sections of this Agreement.

Section 10.07. Master Lease. This Agreement can be utilized as a Master Lease Agreement. This means that the Lessor and the Lessee may agree to the lease of additional Equipment under this Agreement at some point in the future by executing one or more Additional Schedules to Exhibit A, Exhibit B, Exhibit C and Exhibit E as well as other exhibits or documents that may be required by Lessor. Additional Schedules will be consecutively numbered on each of the exhibits which make up the Additional Schedule and all the terms and conditions of the Agreement shall govern each Additional Schedule.

Section 10.08. Entire Writing. This Agreement constitutes the entire writing between Lessor and Lessee. No waiver, consent, modification or change of terms of this Agreement shall bind either party unless in writing and signed by both parties, and then such waiver, consent, modification or change shall be effective only in the specific instance and for the specific purpose given. There are no understandings, agreements, representations, conditions, or warranties, express or implied, which are not specified herein regarding this Agreement or the Equipment leased hereunder. Any terms and conditions of any purchase order or other documents submitted by Lessee in connection with this Agreement which are in addition to or inconsistent with the terms and conditions of this Agreement will not be binding on Lessor and will not apply to this Agreement.

Lessor and Lessee have caused this Agreement to be executed in their names by their duly authorized representatives listed below.

CITY OF RIVIERA BEACH	KANSAS STATE BANK OF MANHATTAN
Signature	Signature
MICHAEL D. BROWN, MAYOR	MICHAEL H. DANIELS, PRESIDENT
Typed Name and Title	Typed Name and Title

© Copyright

Armor Screen Corp.

Straight Screen Load Calculations

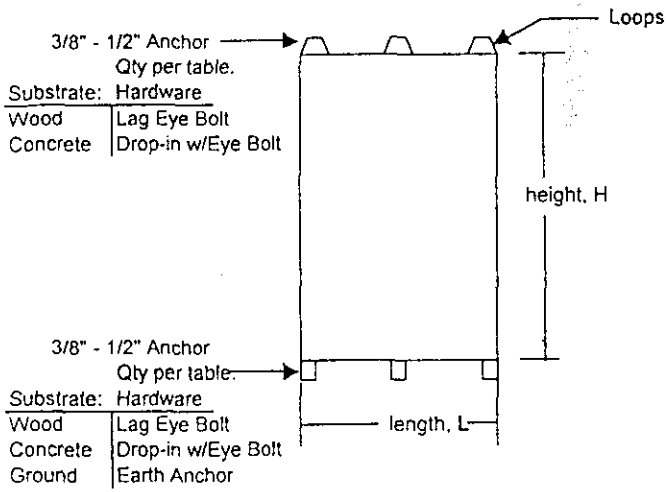

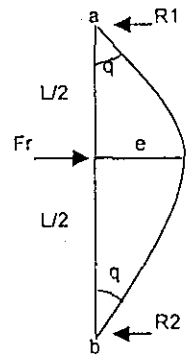

Free Body Diagram

Wind Load = Test PSF
Fr = resultant wind force at center of screen
e = deflection,max.
R1, R2 = reaction forces top and bottom
q =angle of deflection

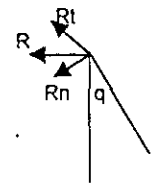

Resolution of Forces Diagram

Equilibrium Equations

sum F = 0
Fr -R1-R2 = 0
Fr = R1 + R2

sumMa = 0
(Fr)(L/2) (R2)(L) =0
Fr = 2(R2)

sumMb = 0
(Fr)(L/2) (R1)(L) =0
Fr = 2(R1)

R1 = R2
R1 =R2 =(1/2)Fr

Resolution of Forces Equations

Tensile force =Rn = Rsin(90-q)
shear force = Rt =Rcos(90-q)
tan q = e/(L/2)

There are reaction supports at approximately 24 inch centers top and bottom. Therefore each reaction support = Fr/[(length/2)+1] = R

The minimum deflection is measured from the center of the screen to the protected surface.

	4 ft	6 ft	8 ft	10 ft	12 ft	14 ft	16 ft
Midpoint offset	5.5 in	6.7 in	8.5 in	11.5 in	17.5 in	28 in	32.25 in
Base offset	5.5 in	6.7 in	8.5 in	11.5 in	17.5 in	29 in	32.25 in

Minimum deflection (e) is based on screen height according to the table below. For screen heights not listed interpolation may be used.

Sample Load Calculation Table for: Riviera Beach Municipal Complex

Opening #	Opening Size (ft)	Screen #	Screen Width ft	Screen Height ft	Area sq.ft	Wind Load psf	Wind Load lbf (Fr)	R1 lbf	R2 lbf	Minimum Number of (½") Anchors @ Top	@ Bottom	Screen Anchor Load Top (lbf)	Bottom (lbf)	Minimum Deflection e (in)	
		6	24.33	23.75	577.84	60	34670.25	17335.13	17335.13	13	8	1333.5	2166.9	42.0	Ground Anchors Used
		7	24.33	23.75	577.84	60	34670.25	17335.13	17335.13	13	10	1333.5	1733.5	42.0	Ground Anchors Used
		8	24.08	23.75	571.90	60	34314.00	17157.00	17157.00	13	7	1319.8	2451.0	42.0	Ground Anchors Used
		9	24.33	23.75	577.84	60	34670.25	17335.13	17335.13	13	7	1333.5	2476.4	42.0	Ground Anchors Used
		10	23.33	23.75	554.09	60	33245.25	16622.63	16622.63	13	7	1278.7	2374.7	42.0	Ground Anchors Used
		11	10.58	23.75	251.28	60	15076.50	7538.25	7538.25	6	4	1256.4	1884.6	42.0	Ground Anchors Used
		12	8.33	23.75	197.84	60	11870.25	5935.13	5935.13	5	2.5	1187.0	2374.1	42.0	Irregular Shape
		13	13.17	23.75	312.79	60	18767.25	9383.63	9383.63	7	5	1340.5	1876.7	42.0	Ground Anchors Used
		14	24.33	23.75	577.84	60	34670.25	17335.13	17335.13	13	7	1333.5	2476.4	42.0	Ground Anchors Used
		15	12.5	23.75	296.88	60	17812.50	8906.25	8906.25	7	5	1272.3	1781.3	42.0	Ground Anchors Used
		16	22.58	23.75	536.28	60	32176.50	16088.25	16088.25	12	7	1340.7	2298.3	42.0	Ground Anchors Used
		17	20.25	23.75	480.94	60	28856.25	14428.13	14428.13	11	6	1311.6	2404.7	42.0	Ground Anchors Used
		18	16.92	23.75	401.85	60	24111.00	12055.50	12055.50	9	5	1339.5	2411.1	42.0	Ground Anchors Used

Armor Screen products are proven to be impact resistant in accordance with Dade County building Code protocol PA201.

Anchor Allowable Loads: 1/2" dropin with 1/2" eyebolt (SS) = 1333 lbs. 48" X 5/8" X 6" helix Ground Anchor = 3150 lbs.

T J Rogers 3/15/02

Thomas J. Rogers, P.E.
Jupiter, FL
561.745.0685
Florida Reg. # 44124

CONFIDENTIAL MATERIAL

© Copyright

Armor Screen Corp.

Straight Screen Load Calculations

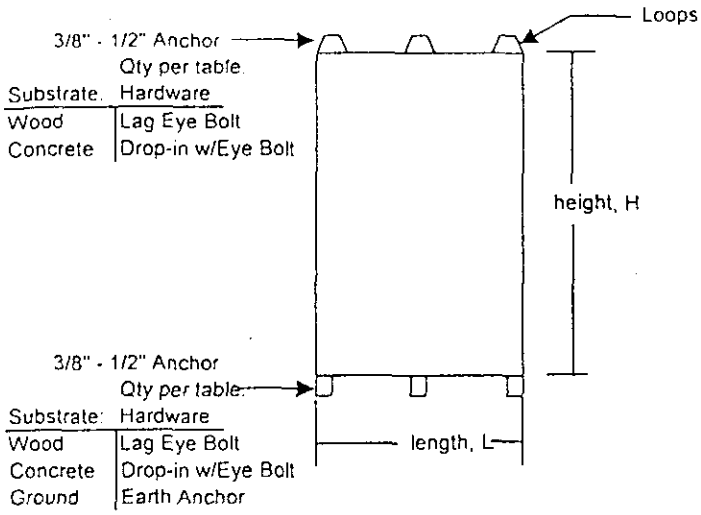

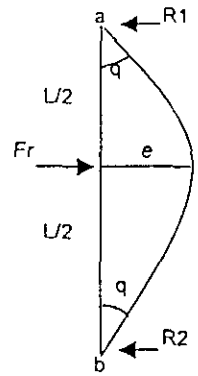

Free Body Diagram

Wind Load = Test PSF

Fr = resultant wind force at center of screen

e = deflection,max.

R1, R2 = reaction forces top and bottom

q =angle of deflection

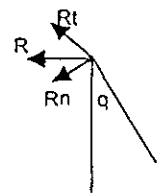

Resolution of Forces Diagram

Equilibrium Equations

sum F = 0
Fr -R1-R2 = 0
Fr = R1 + R2

sumMa = 0
(Fr)(L/2) (R2)(L) =0
Fr = 2(R2)

sumMb = 0
(Fr)(L/2) (R1)(L) =0
Fr = 2(R1)

R1 = R2
R1 =R2 =(1/2)Fr

Resolution of Forces Equations

Tensile force =Rn = Rsin(90-q)
shear force = Rt =Rcos(90-q)
tan q = e/(L/2)

The minimum deflection is measured from the center of the screen to the protected surface.

	4 ft	6 ft	8 ft	10 ft	12 ft	14 ft	16 ft
Midpoint offset	5.5 in	6.7 in	8.5 in	11.5 in	17.5 in	28 in	32.25 in
Base offset	5.5 in	6.7 in	8.5 in	11.5 in	17.5 in	29 in	32.25 in

Minimum deflection (e) is based on screen height according to the table below. For screen heights not listed interpolation may be used

There are reaction supports at approximately 24 inch centers top and bottom. Therefore each reaction support = Fr/{(length/2)+1} = R

Sample Load Calculation Table for: Riviera Beach Municipal Complex

Opening #	Opening Size (ft)	Screen #	Screen Width ft	Screen Height ft	Area sq.ft	Wind Load psf	Wind Load lbf (Fr)	R1 lbf	R2 lbf	Minimum Number of (½") Anchors @ Top	@ Bottom	Screen Anchor Load Top (lbf)	Bottom (lbf)	Minimum Deflection e (in)
		19	22.38	23.33	522.13	60	31327.52	15663.76	15663.76	12	7	1305.3	2237.7	42.0
		20	12.33	24.58	303.07	60	18184.28	9092.14	9092.14	7	8	1298.9	1136.5	42.0
		25A	10.33	22.83	235.83	60	14150.03	7075.02	7075.02	6	6	1179.2	1179.2	42.0

Ground Anchors Used

Armor Screen products are proven to be impact resistant in accordance with Dade County building Code protocol PA201

Anchor Allowable Loads: 1/2" dropin with 1/2" eyebolt (SS) = 1333 lbs. 48" X 5/8" X 6" helix Ground Anchor = 3150 lbs.

T. Rogers
3/15/02

THOMAS J. ROGERS
~~Daniel T. Koenig~~, P.E
Florida Registered Professional Engineer
No. ~~52999~~
44124

CONFIDENTIAL MATERIAL

© Copyright

Armor Screen Corp.

Angled Screen Load Calculations

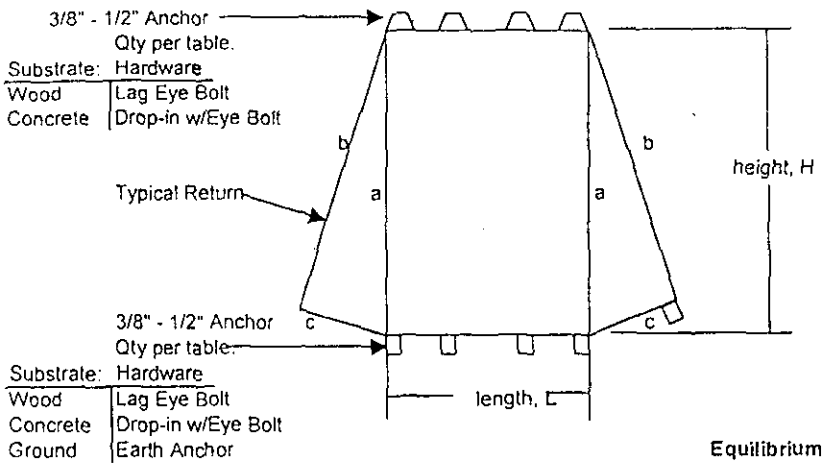

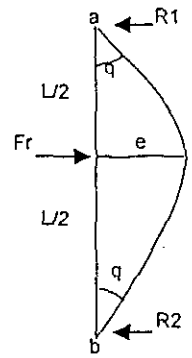

Free Body Diagram

Wind Load = Test PSF
Fr = resultant wind force at center of screen
e = deflection,max.
R1, R2 = reaction forces top and bottom
q =angle of deflection

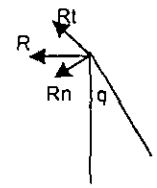

Resolution of Forces Diagram

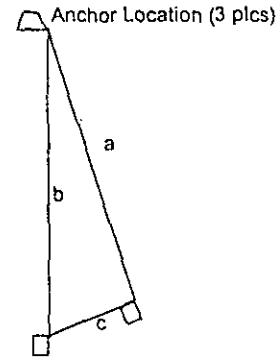

Typical Return

Equilibrium Equations

sum F = 0
Fr -R1-R2 = 0
Fr = R1 + R2

sumMa = 0
(Fr)(L/2) (R2)(L) =0
Fr = 2(R2)

sumMb = 0
(Fr)(L/2) (R1)(L) =0
Fr = 2(R1)

R1 = R2
R1 =R2 =(1/2)Fr

Resolution of Forces Equations

Tensile force =Rn = Rsin(90-q)
shear force = Rt =Rcos(90-q)
tan q = e/(L/2)

Typical Return

Return Area = ((1/2) b x c)

Return Load = Return Area x 90

Return Anchor load = Return load or No. applicat

There are reaction supports at approximately 24 inch centers top and bottom. Therefore each reaction support = Fr/[(length/2)+1] = R

The minimum deflection is measured from the center of the screen to the protected surface.

Sample Load Calculation Table for: Riviera Beach Municipal Library

	Screen #	Screen Width ft	Screen Height ft	Area sq.ft	Wind Load psf	Wind Load lbf (Fr)	R1 lbf	R2 lbf	Minimum Number of (½") Anchors @ Top	@ Bottom	Screen Anchor Load Top (lbf)	Bottom (lbf)	Minimum Deflection e (in)	Return Area sqft	Return Load lbf	Return Anchor Load (lbf)
Grd. Anchors Used	15	18.33	23.33	427.64	60	25658.33	12829.17	12829.17	9	5	1425.5	2565.8	32.5	63.19	5686.69	1421.67
Grd. Anchors Used	20A	4.33	23.75	102.84	60	6170.25	3085.13	3085.13	3	2	1028.4	1542.6	32.5	64.32	5789.06	1447.27
Grd. Anchors Used	21	18.33	23.33	427.64	60	25658.33	12829.17	12829.17	10	5	1282.9	2565.8	39.0	75.82	6824.03	1364.81
Grd. Anchors Used	22	20.33	23.33	474.30	60	28457.93	14228.97	14228.97	11	11	1293.5	1293.5	21.5	41.80	3761.96	940.49

Minimum deflection (e) is based on screen height according to the table below. For screen heights not listed interpolation may be used.

	6 ft	8 ft	10 ft	12 ft	14 ft	16 ft
Mid Point	6.75 in	8.5 in	11.5 in	17.5 in	28.0 in	32.25 in
Bottom	13.5 in	17.0 in	23.0 in	35.0 in	56.0 in	64.5 in

Armor Screen products are proven to be impact resistant in accordance with Dade County building Code protocol PA201.

Anchor Allowable Loads: 1/2" dropin with 1/2" eyebolt (SS) = 1333 lbs.

48" X 5/8" X 6" helix Ground Anchor = 3150 lbs.

T. Rogers
3/15/02

Thomas J. Rogers, P.E.
Jupiter, FL
561.745.0685
Florida Reg. # 44124

CONFIDENTIAL MATERIAL

© Copyright

Armor Screen Corp.

Angled Screen Load Calculations

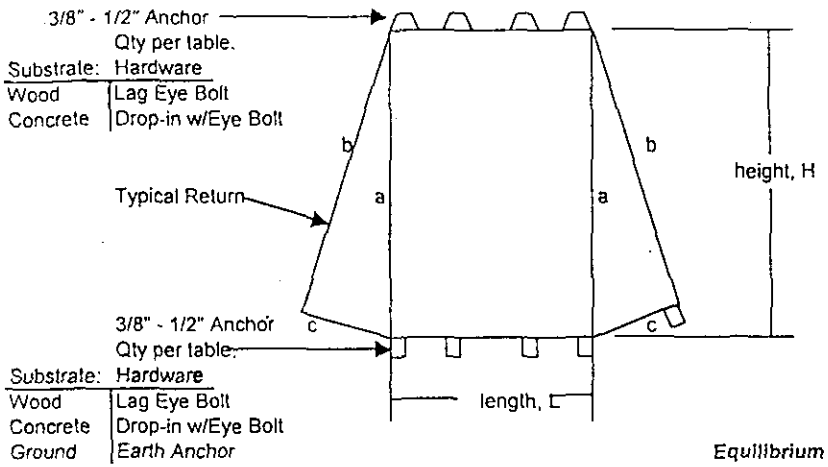

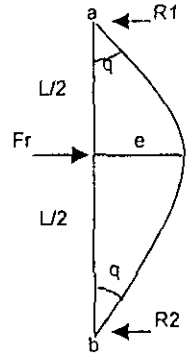

Free Body Diagram

Wind Load = Test PSF
Fr = resultant wind force at center of screen
e = deflection,max.
R1, R2 = reaction forces top and bottom
q =angle of deflection

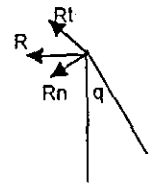

Resolution of Forces Diagram

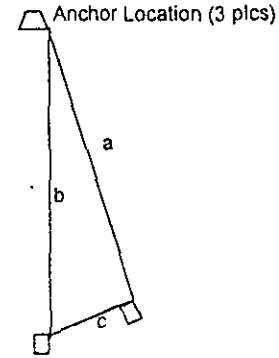

Typical Return

Equilibrium Equations

sum F = 0
Fr -R1-R2 = 0
Fr = R1 + R2

sumMa = 0
(Fr)(L/2) (R2)(L) =0
Fr = 2(R2)

sumMb = 0
(Fr)(L/2) (R1)(L) =0
Fr = 2(R1)

R1 = R2
R1 =R2 =(1/2)Fr

Resolution of Forces Equations

Tensile force =Rn = Rsin(90-q)
shear force = Rt =Rcos(90-q)
tan q = e/(L/2)

The minimum deflection is measured from the center of the screen to the protected surface.

Return Area = ((1/2) b x c)

Return Load = Return Area x 90

Return Anchor load = Return load , *or No. applicab*

There are reaction supports at approximately 24 inch centers top and bottom. Therefore each reaction support = *Fr/((length/2)+1] = R*

Sample Load Calculation Table for: Riviera Beach Municipal Library

Opening #	Opening Size (ft)	Screen #	Screen Width ft	Screen Height ft	Area sq.ft	Wind Load psf	Wind Load lbf (Fr)	R1 lbf	R2 lbf	Minimum Number of (½") Anchors @ Top	@ Bottom	Screen Anchor Load Top (lbf)	Bottom (lbf)	Minimum Deflection e (in)	Return Area sqft	Return Load lbf	Return Anchor Load (lbf)
		21B	6.33	24.17	153.00	60	9179.77	4589.88	4589.88	4	4	1147.5	1147.5	11.5	23.16	2084.66	694.89
		22	20.33	23.33	474.30	60	28457.93	14228.97	14228.97	11	11	1293.5	1293.5	21.5	41.80	3761.96	940.49

Minimum deflection (e) is based on screen height according to the table below. For screen heights not listed interpolation may be used.

	6 ft	8 ft	10 ft	12 ft	14 ft	16 ft
Mid Point	6.75 in	8.5 in	11.5 in	17.5 in	28.0 in	32.25 in
Bottom	13.5 in	17.0 in	23.0 in	35.0 in	56.0 in	64.5 in

Armor Screen products are proven to be impact resistant in accordance with Dade County building Code protocol PA201.
Anchor Allowable Loads: 1/2" dropin with 1/2" eyebolt (SS) = 1333 lbs.
48" X 5/8" X 6" helix Ground Anchor = 3150 lbs.

T. Rogers
3/15/02

Thomas J. Rogers, P.E.
Jupiter, FL
561.745.0685
Florida Reg. # 44124

CONFIDENTIAL MATERIAL

Schedule (01)

EXHIBIT E

LESSEE RESOLUTION

DUPLICATE ORIGINAL

RE: Lease With Option to Purchase Agreement dated as of January 24, 2001, between Kansas State Bank of Manhattan (Lessor) and City of Riviera Beach (Lessee)

At a duly called meeting of the Governing Body of the Lessee (as defined in the Agreement) held on February 7, 2001 the following resolution was introduced and adopted:

BE IT RESOLVED by the Governing Body of Lessee as follows:

1. **Determination of Need.** The Governing Body of Lessee has determined that a true and very real need exists for the acquisition of the Equipment described on Exhibit A of the Lease With Option to Purchase Agreement dated as of January 24, 2001, between City of Riviera Beach (Lessee) and Kansas State Bank of Manhattan (Lessor).

2. **Approval and Authorization.** The Governing Body of Lessee has determined that the Agreement, substantially in the form presented to this meeting, is in the best interests of the Lessee for the acquisition of such Equipment, and the Governing Body hereby approves the entering into of the Agreement by the Lessee and hereby designates and authorizes the following person(s) to execute and deliver the Agreement on Lessee's behalf with such changes thereto as such person(s) deem(s) appropriate, and any related documents, including any Escrow Agreement, necessary to the consummation of the transaction contemplated by the Agreement.

   Authorized Individual(s): MICHAEL D. BROWN, MAYOR
   (Printed or Typed Name and Title of individual(s) authorized to execute the Agreement)

3. **Adoption of Resolution.** The signatures below from the designated individuals from the Governing Body of the Lessee evidence the adoption by the Governing Body of this Resolution.

Signature: _____
(Signature of Secretary, Board Chairman or other member of the Governing Body)

Typed Name & Title CARRIE E. WARD, CITY CLERK, CMC/AAE
(Typed Name and Title of individual who signed directly above)

Attested By: _____
(Signature of one additional person who can witness the passage of this Resolution)

Typed Name & Title: CARRIE E. WARD, CITY CLERK, CMC/AAE
(Typed name of individual who signed directly above)

Schedule (01)

DUPLICATE ORIGINAL

EXHIBIT F

BANK QUALIFIED CERTIFICATE

RE: *Lease With Option to Purchase Agreement dated as of January 24, 2001*, between Kansas State Bank of Manhattan (Lessor) and City of Riviera Beach (Lessee)

Whereas, Lessee hereby represents that it is a "Bank Qualified" Issuer for the calendar year in which this Agreement is executed by making the following designations with respect to Section 265 of the Internal Revenue Code. (A "Bank Qualified Issuer" is an issuer that issues less than ten million ($10,000,000) dollars of tax-exempt obligations during the calendar year).

Now, therefor, Lessee hereby designates this Agreement as follows:

1. **Designation as Qualified Tax-Exempt Obligation.** Pursuant to Section 265(b)(3)(B)(i) of the Internal Revenue Code of 1986 as amended (the "Code"), the Lessee hereby specifically designates the Agreement as a "qualified tax-exempt obligation" for purposes of Section 265(b)(3) of the Code. In compliance with Section 265(b)(3)(D) of the Code, the Lessee hereby represents that the Lessee will not designate more than $10,000,000 of obligations issued by the Lessee in the calendar year during which the Agreement is executed and delivered as such "qualified tax-exempt obligations".

2. **Issuance Limitation.** In compliance with the requirements of Section 265(b)(3)(C) of the Code, the Lessee hereby represents that the Lessee (including all subordinate entities of the Lessee within the meaning of Section 265(b)(3)(E) of the Code) reasonably anticipates not to issue in the calendar year during which the Agreement is executed and delivered, obligations bearing interest exempt from federal income taxation under Section 103 of the Code (other than "private activity bonds" as defined in Section 141 of the Code) in an amount greater than $10,000,000.

City of Riviera Beach

Signature

MICHAEL D. BROWN, MAYOR

Typed Name and Title

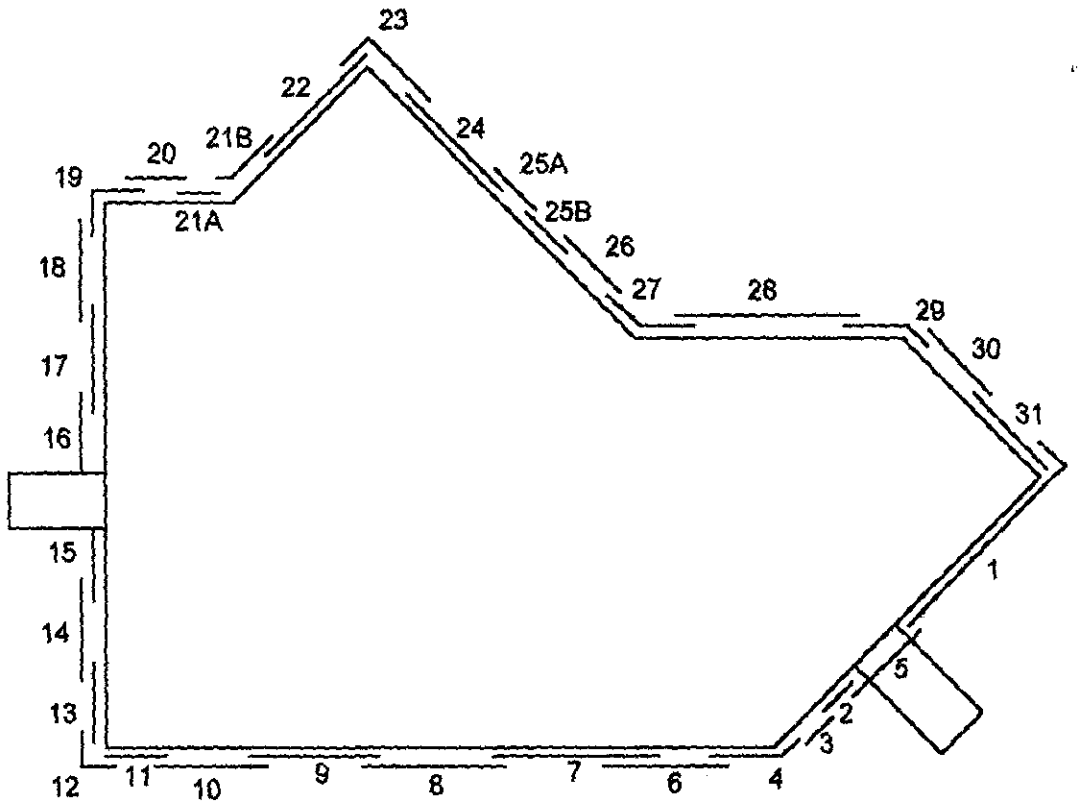

ARMOR SCREEN	ARMOR SCREEN CORPORTATION 2001-A NORTH CONGRESS AVE. RIVIERA BEACH, FL 33404		MUNICIPAL COMPLEX		
	ENGINEER JEFFREY C. FRIANT	DATE: 01/04/01	DWG NO.		REV 0
	DRAFTER HARRY GABDIAN	DATE: 01/04/01		SIZE A	SCALE NE	SHEET 1 OF 1

Form **8038-GC**
(Rev. May 1999)
Department of the Treasury
Internal Revenue Service

Information Return for Small Tax-Exempt Governmental Bond Issues, Leases, and Installment Sales

▶ Under Internal Revenue Code section 149(e)

Caution: Use Form 8038-G if the issue price of the issue is $100,000 or more.

OMB No. 1545-0720

DUPLICATE ORIGINAL

Part I Reporting Authority — Check box if Amended Return ▶ ☐

1. Issuer's name: City of Riviera Beach
2. Issuer's employer identification number: 59 600417
3. Number and street (or PO Box if mail is not delivered to street address): 600 W. Blue Heron Blvd. — Room/Suite
4. City, town, or post office, state, and ZIP code: Riviera Beach, Florida 33404
5. Report number: GC -
6. Name and title of officer or legal representative whom the IRS may call for more information: DENNIS WIDLANSKY, FINANCE DIRECTOR
7. Telephone number of officer or legal representative: (561) 845-4040

Part II Description of Obligations (Check if reporting: a single issue ☐ or on a consolidated basis ☐)

8a	Issue price of obligation(s) (see instructions)	8a	$
b	Issue date (single issue) or calendar year (consolidated) (see instructions) ▶ ___/___/___		
9	Amount of the reported obligation(s) on line 8a:		
a	Used to refund prior issue(s)	9a	
b	Representing a loan from the proceeds of another tax-exempt obligation (e.g., bond bank)	9b	
10	If the issue has designated any issue under section 265(b)(3)(B)(i)(III) (small issuer exception), check this box ▶		☐
11	If any obligation is in the form of a lease or installment sale, check this box ▶		☐
12	If the issuer has elected to pay a penalty in lieu of arbitrage rebate, check this box ▶		☐

Please Sign Here

Under penalties of perjury, I declare that I have examined this return and accompanying schedules and statements, and, to the best of my knowledge and belief, they are true, correct, and complete.

▶ Veronique G. Rellford — Issuer's authorized representative

02-07-01 — Date

▶ VERONIQUE G. RELLFORD — Type or print name and title: PURCHASING DI

GENERAL INSTRUCTIONS

Section references are to the Internal Revenue Code unless otherwise noted.

Purpose of Form

Form 8038-GC is used by the issuers of tax-exempt governmental obligations to provide the IRS with information required by section 149(e) and to monitor the requirements of sections 141 - 150.

Who Must File

Issuers of tax-exempt governmental obligations with issue prices of less than $100,000 must file Form 8038-GC. Issuers of a tax-exempt govern-mental obligation with an issue price of $100,000 or more must file Form 8038-G, *Information Return for Tax-Exempt Governmental Obligations.*

Filing a separate return–Issuers have the option to file a separate Form 8038-GC for any tax-exempt governmental obligation with an issue price of less than $100,000.

An issuer of a tax-exempt bond used to finance construction expenditures must file a separate Form 8038-GC for each issue to give notice to the IRS that an election was made to pay a penalty in lieu of arbitrage rebate (see the line 12 instructions).

Filing a consolidated return–For all tax-exempt governmental obligations with issue prices of less than $100,000 that are not reported on a separate Form 8038-GC, an issuer must file a consolidated information return including all such issues issued within the calendar year.

Thus, an issuer may file a separate Form 8038-GC for each of a number of small issues and report the remainder of small issues issued during the calendar year on one consolidated Form 8038-GC. *However, a separate Form 8038-GC must be filed to give the IRS* notice of the election to pay a penalty in lieu of arbitrage rebate.

When to File

To file a separate return, file Form 8038-GC on or before the 15th day of the second calendar month after the close of the calendar quarter in which the issue is issued.

To file a consolidated return, file Form 8038-GC on or before *February 15th of the calendar year in which the issue is issued.*

Late filing. An issuer may be granted an extension of time to file Form 8038-GC under Section 3 of Rev. Proc. 88-10, 1988-1 C.B.635, if it is determined that the failure to file on time is not due *to willful neglect. Type or print at the top of the form, "This* Statement is Submitted in Accordance with Rev. Proc. 88-10." Attach to the Form 8038-GC a letter briefly stating why the form was not submitted to the IRS on time. Also indicate whether the obligation in question is under examination by the IRS. Do not submit copies of any bond documents, leases, or installment sale documents.

Where to File

File Form 8038-GC with the Internal Revenue Service Center, Ogden, UT 84201.

Other Forms that May be Required

For rebating arbitrage (or paying a penalty in lieu of arbitrage rebate) to the Federal government, use Form 8038-T, *Arbitrage Rebate and Penalty in Lieu of Arbitrage Rebate.* For private activity bonds, use Form 8038, *Information Return for Tax-Exempt Private Activity Bond Issues.*

Rounding to Whole Dollars

You may show the money items on this return as whole-dollar amounts. To do so, drop any amount less than 50 cents and increase any amount from 50 cents through 99 cents to the next higher dollar.

Definitions

Obligations. This refers to a single tax-exempt governmental obligation if Form 8038-GC is used for separate reporting or to multiple tax-exempt governmental obligations if the form is used for consolidated reporting.

Tax-exempt obligation. This is a bond, installment purchase agreement, or financial lease, on which the interest is excluded from income under section 103.

Tax-exempt governmental obligation. A tax-exempt obligation that is not a private activity bond, (see below) is a tax-exempt governmental obligation. This includes a bond issued by a qualified volunteer fire department under section 150(e).

Private activity bond. This includes an obligation issued as part of an issue in which:

More than 10% of the proceeds are to be used for any private activity business use

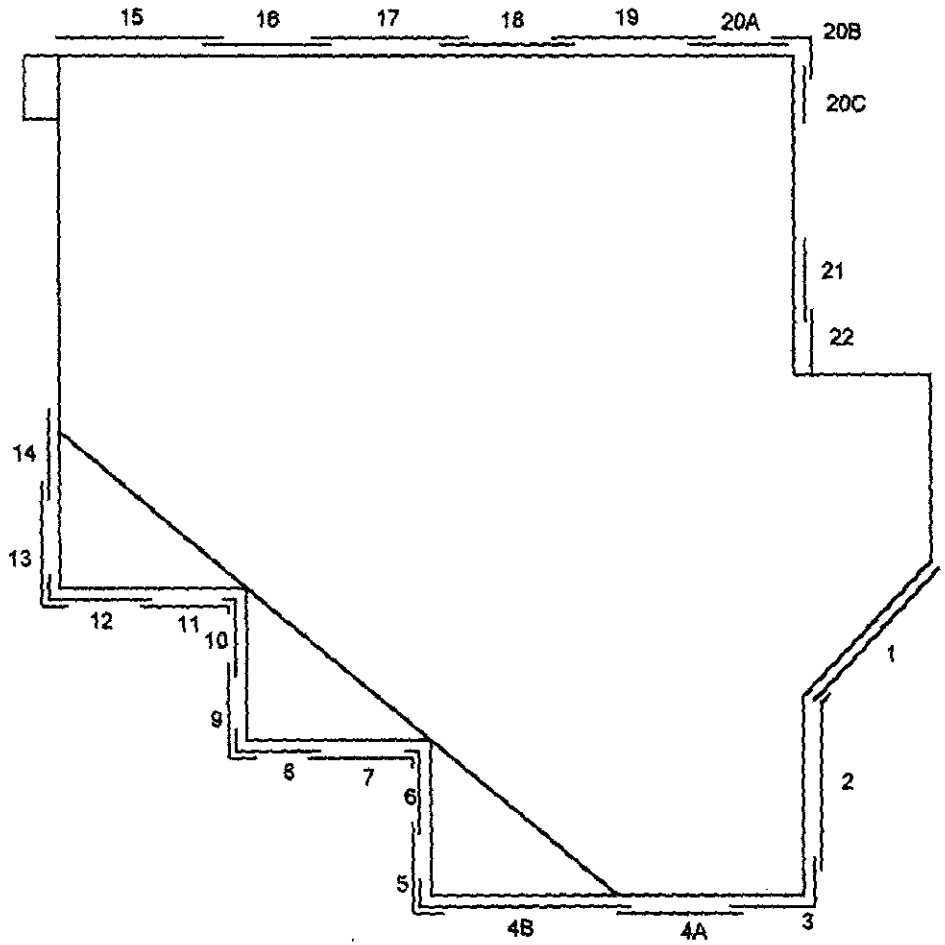

CITY OF RIVIERA BEACH
LIBRARY BUILDING

ARMOR SCREEN

ARMOR SCREEN CORPORATION
2001-A NORTH CONGRESS AVE.
RIVIERA BEACH, FL 33404

MUNICIPAL COMPLEX

ENGINEER JEFFREY C. FRIANT	DATE: 01/04/01	DWG NO.		REV 0
DRAFTER HARRY GABOIAN	DATE: 01/04/01		SIZE A	SHEET 1 OF 1

PASSED AND ADOPTED this 6th day of June, 2001.

EDWARD RODGERS
CHAIRPERSON

APPROVED:

MICHAEL D. BROWN
MAYOR

DAVID G. SCHNYER
CHAIR PRO-TEM

DONALD R. WILSON

SYLVIA LEE BLUE

ELIZABETH "LIZ" WADE
COUNCILMEMBERS

[MUNICIPAL SEAL]

ATTEST:

CARRIE E. WARD, CMC/AAE

MOTIONED BY: D. Wilson

SECONDED BY: D. Schnyer

E. RODGERS	aye
D. SCHNYER	aye
D. WILSON	aye
S. BLUE	aye
E. WADE	aye

REVIEWED FOR LEGALSUFFICIENCY

CITY ATTORNEY
CITY OF RIVIERA BEACH

DATE 5/24/01

RESOLUTION NO. 77-01

A RESOLUTION OF THE CITY COUNCIL OF THE CITY OF RIVIERA BEACH, PALM BEACH COUNTY, FLORIDA, RENEWING THE CITY ATTORNEY EMPLOYMENT AGREEMENT BETWEEN THE CITY OF RIVIERA BEACH, FLORIDA AND PAMALA H. RYAN; AUTHORIZING THE MAYOR AND CITY CLERK TO EXECUTE SAID AGREEMENT; AND PROVIDING AN EFFECTIVE DATE.

BE IT RESOLVED, BY THE CITY COUNCIL OF THE CITY OF RIVIERA BEACH, PALM BEACH COUNTY, FLORIDA, as follows:

SECTION ONE. That the City Council hereby renews the City Attorney Employment Agreement between the City of Riviera Beach, Florida and Pamala H. Ryan.

SECTION TWO. That a copy of the Employment Agreement is attached hereto and made a part of this Resolution.

SECTION THREE. This Resolution shall take effect immediately upon its passage and approval by the City Council.

PASSED and APPROVED this 16th day of May 2001.

APPROVED:

Michael D. Brown
Mayor

Attest:

[Municipal Seal]

Carrie E. Ward, CMC/AAE
City Clerk

Edward Rodgers
Chairman

David G. Schnyer
Chairperson Pro Tem

Donald R. Wilson

Sylvia Lee Blue

Elizabeth "Liz" Wade
Council Members

RESOLUTION NO. 77-01
-2-

Motioned by: E. Wade

Seconded by: S. Blue

E. Rodgers	nay
D. Schnyer	aye
D. Wilson	absent
S. Blue	aye
E. Wade	aye

[PHR: dpm050901]

REVIEWED FOR LEGAL SUFFICIENCY
Asst. CITY ATTORNEY
CITY OF RIVIERA BEACH

DATE: 05.09.01

CITY ATTORNEY EMPLOYMENT AGREEMENT

THIS AGREEMENT is made and entered into this 16 day of May, 2001 by and between the CITY OF RIVIERA BEACH, State of Florida, duly organized and validly existing municipal corporation, (hereinafter referred to as "City"), and PAMALA H. RYAN, (hereinafter referred to as "Employee").

IN CONSIDERATION of the mutual promises hereinafter set forth, the City and Employee do mutually agree as follows:

Section 1. Duties -

A. The City agrees to employ Employee as City Attorney on a full time basis as the chief legal officer of the City and head of the City's Legal Department.

B. Employee agrees to perform the duties and functions of the City Attorney as specified in the City Charter and Code of Ordinances of the City of Riviera Beach, Florida, and agrees to perform such other legally permissible and proper duties and functions as the City Council shall from time to time require.

Section 2. Salary and Term of Agreement -

A. In consideration of the services to be performed by Employee, the City agrees to pay Employee an annual base salary of $84,068.60, payable in installments at the same time as other management employees are paid. Further, Employee shall receive and be

entitled to all longevity, cost of living/wage adjustment increases and other increases which the City grants to other management employees.

B. Employee's term of employment shall be for one year. This agreement shall be renewed automatically on an annual basis for one-year terms unless either party notifies the other in writing at least ninety days prior to the expiration of the term that it does not wish to renew.

C. Subject to the provisions set forth in Section 3 below, Employee serves at the pleasure of the City Council and nothing in this agreement shall prevent, limit, or otherwise interfere with the right of the City to terminate the employment of Employee.

D. Subject to the provisions set forth in Section 3 below, nothing in this agreement shall prevent, limit, or otherwise interfere with the right of Employee to resign the position of the City Attorney.

Section 3. Termination and Severance Pay –

A. The City Council may at any time, terminate the employment of Employee under this agreement at the City's pleasure and without cause. If termination of employment occurs prior to the expiration of this agreement, Employee shall be entitled to three months salary and all other accumulated employment benefits per City policy as Employee's severance pay. In consideration of payment of severance, Employee shall execute a general release in favor of the City, its successors and assigns.

B. In the event the Employee voluntarily resigns the position of City Attorney prior to the expiration of this agreement, Employee shall provide the City with thirty days written notice of said resignation. Upon receipt of such notice, the City at its option, may require Employee to terminate her employment at an earlier date than set forth in the notice of resignation, provided that the City may not require Employee to terminate her employment less than ten days after receipt of said notice. In such event, the City's obligation shall be to pay Employee for all time actually worked, as well as all remaining accrued employment benefits pursuant to city policy; said sums to be paid prior to the conclusion of Employee's employment.

Section 4. Benefits -

The City shall provide Employee with all of the benefits accruing to City employees in management positions, except to the extent modified by this agreement.

Section 5. Retirement -

Employee will continue to participate as a member of the City Managed Retirement System.

Section 6. Deferred Compensation -

The City will pay Employee annual deferred compensation in an amount of $4,000. Said deferred compensation shall be paid to the Public Employees Benefit Services Corporation (PEBSCO). Such payments shall be made on a bi-weekly basis or at such other pay periods as may be

RESOLUTION NO. 73-01

A RESOLUTION OF THE CITY COUNCIL OF THE CITY OF RIVIERA BEACH, PALM BEACH COUNTY, FLORIDA, EXPRESSING ITS SUPPORT FOR THE CONSTRUCTION OF THE PROPOSED FLORIDA TURNPIKE INTERCHANGE BETWEEN BEELINE HIGHWAY AND NORTHLAKE BOULEVARD; AND PROVIDING FOR AN EFFECTIVE DATE.

WHEREAS, the Florida Department of Transportation (FDOT) is proposing a new interchange for the Florida Turnpike between Beeline Highway (SR 710) and Northlake Boulevard; and

WHEREAS, the FDOT has provided the necessary funding for construction of this interchange which is scheduled for the year 2004; and

WHEREAS, the City Council believes that the proposed interchange would improve traffic circulation in the area and access to the Port of Palm Beach.

NOW THEREFORE, BE IT RESOLVED BY THE CITY OF RIVIERA BEACH, PALM BEACH COUNTY, FLORIDA AS FOLLOWS:

SECTION 1. The City Council of the City of Riviera Beach hereby expresses its support for the construction of the proposed Florida Turnpike interchange between Beeline Highway (SR 710) and Northlake Boulevard.

SECTION 2. This resolution shall become effective immediately upon its adoption.

PASSED AND APPROVED this 16TH day of MAY, 2001

APPROVED:

MICHAEL D. BROWN, MAYOR

EDWARD RODGERS, CHAIRPERSON

DAVID SCHNYER, CHAIR PRO-TEM

{MUNICIPAL SEAL}

DONALD R. WILSON

SYLVIA LEE BLUE

ATTEST:

ELIZABETH "LIZ" WADE
COUNCIL MEMBERS

CARRIE E. WARD, CMC/AAE
CITY CLERK

Motioned By E. Wade
Seconded By D. Schnyer

E. Rodgers	aye
D. Schnyer	aye
D. Wilson	absent
S. Blue	aye
L. Wade	aye

Reviewed as to Legal Sufficiency

City Attorney
City of Riviera Beach
Date: 5/14/01

/ljs

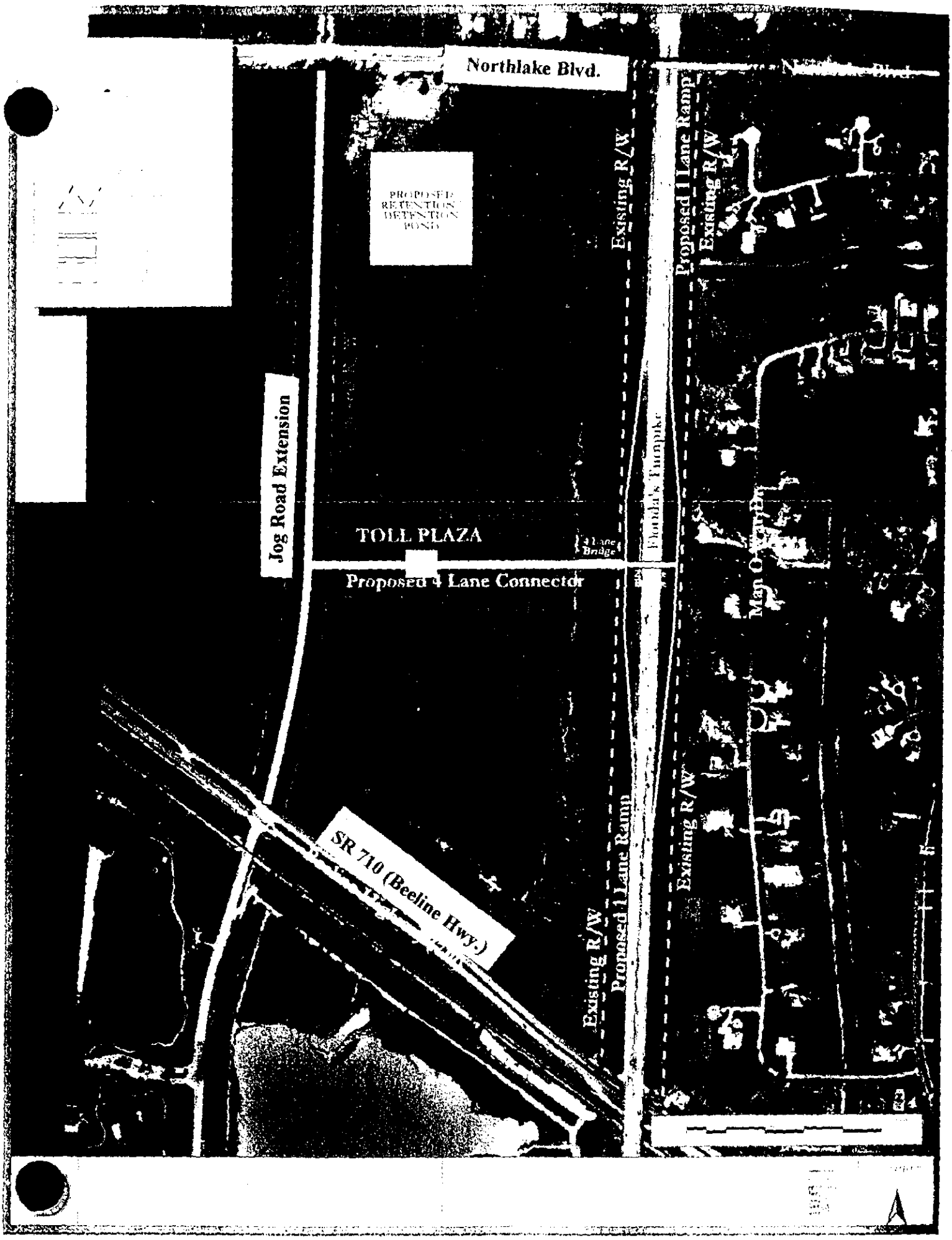
Northlake Blvd.
PROPOSED RETENTION/ DETENTION POND
Existing R/W
Proposed 1 Lane Ramp
Existing R/W
Jog Road Extension
TOLL PLAZA
Proposed 4 Lane Connector
Florida's Turnpike
Existing R/W
Proposed 1 Lane Ramp
Existing R/W
SR 710 (Beeline Hwy.)

RESOLUTION NO. 74-01

A RESOLUTION OF THE CITY COUNCIL OF THE CITY OF RIVIERA BEACH, PALM BEACH COUNTY, FLORIDA, AUTHORIZING THE MAYOR AND CITY CLERK TO RELEASE CODE ENFORCEMENT LIEN ON PROPERTIES LOCATED AT 1420 BROADWAY, AND 19 E. 15TH STREET, RIVIERA BEACH FOR VIOLATIONS THAT ARE IN COMPLIANCE FOR THE AMOUNT OF $5,000.00; AUTHORIZING THE MAYOR AND CITY CLERK TO ISSUE A RELEASE OF LIEN ON SAID PROPERTIES; AND PROVIDING AN EFFECTIVE DATE.

WHEREAS, property located at 1420 Broadway, Book 09509, Page 1020 was found to be in violation of the City's Code of Ordinances on July 31, 1996, pursuant to Case No. CEB 96-080 dated July 31, 1996; and

WHEREAS, liens were filed against the property by the City of Riviera Beach on August 11, 1996, for non-compliance with the Code Enforcement Board's order; and

WHEREAS, property located at 19 E. 15th Street, Book 06955, Page 0057 was found to be in violation of the City's Code of Ordinances March 22, 1995, pursuant to Case No. CEB 95-044 dated March 22, 1995; and

WHEREAS, liens were filed against the property by the City of Riviera Beach on April 5, 1995, for non-compliance with the Code Enforcement Board's order; and

WHEREAS, Case No. CEB 96-080 was complied by the Code Enforcement Division on November 1, 1996; and

WHEREAS, Case No. CEB 95-044 was complied by the Code Enforcement Division on February 2, 1996; and

WHEREAS, the properties located at 1420 Broadway and 19 E. 15th Street are owned by Richard Lawson, and

WHEREAS, City staff recommends an offer of settlement with Richard Lawson in the amount of $5,000.00; and

WHEREAS, pursuant to Section 162.09(3), Florida Statutes, the City Council has the authority to execute a release of lien; and

WHEREAS, the City Council finds it in the best interest of the City to release the liens on the subject properties.

NOW THEREFORE, BE IT RESOLVED BY THE CITY COUNCIL OF THE CITY OF RIVIERA BEACH, PALM BEACH COUNTY, FLORIDA, AS FOLLOWS:

Section 1. The above recitals are true and are hereby incorporated into this resolution.

Section 2. The City Council hereby accepts the sum of $5,000.00 as consideration for the release of liens hereby granted on the subject property.

Section 3. The Mayor and the City Clerk are authorized to execute a release of lien on the subject property upon payment in full of the aforementioned amount.

Section 4. This resolution shall take effect immediately upon its passage and adoption.

PASSED and ADOPTED this 16TH day of MAY, 2001.

APPROVED:

Michael D. Brown, MAYOR

{MUNICIPAL SEAL}

ATTEST:

CARRIE E. WARD, CMC/AAE
CITY CLERK

Edward Rodgers, CHAIRPERSON

David G. Schnyer CHAIRPRO- TEM

Donald R. Wilson

Sylvia Lee Blue

Elizabeth "Liz" Wade
COUNCIL MEMBERS

Motioned By: D. Schnyer
Seconded By: S. Blue

E. Rodgers	aye
E. Wade	nay
D. Wilson	absent
S. Blue	aye
D. Schnyer	aye

Reviewed as to Legal Sufficiency

City Attorney
City of Riviera Beach

Date:

RESOLUTION NO. 75-01

A RESOLUTION OF THE CITY COUNCIL OF THE CITY OF RIVIERA BEACH, PALM BEACH COUNTY, FLORIDA, APPROVING AND AUTHORIZING THE MAYOR AND CITY CLERK TO EXECUTE THE AUTHORIZATION TO PERFORM PROFESSIONAL ENGINEERING SERVICE FOR THE REVIEWING OF INTER-LOCAL AGREEMENTS AND VARIOUS STUDIES BY THE CONSULTING ENGINEERING FIRM OF R.C.T. ENGINEERING, INC. OF WEST PALM BEACH IN AN AMOUNT NOT TO EXCEED $38,711 AND AUTHORIZING THE MAYOR AND FINANCE DIRECTOR TO PAY THIS AMOUNT FROM ACCOUNT NO. 401-1437-5330-3103. ADDITIONALLY, THAT COUNCIL AUTHORIZES THE FINANCE DIRECTOR TO TRANSFER FUNDS IN THE AMOUNT OF $60,000 FROM THE UTILITIES CONTINGENCY ACCOUNT NO. 401-1437-5330-5999 INTO THE PROFESSIONAL SERVICE-ENGINEERING ACCOUNT NO. 401-1437-5330-3103.

WHEREAS, R.C.T. Engineering, Inc. (R.C.T.) has prepared an Authorization to Perform Engineering agreement for this project; and

WHEREAS, the primary purpose of this proposed authorization is for R.C.T. to provide professional engineering services to review Inter-local Agreements and to conduct various studies for the Utilities' Water Treatment, Distribution and Sewer Collection; and

WHEREAS, it is necessary to transfer funds in the amount of $60,000 from the Utilities Contingency Account to the depleted Professional Service Engineering Account to cover the cost of the aforementioned proposed reviews and studies to be performed by R.C.T. in an amount not to exceed $38,711.

NOW, THEREFORE, BE IT RESOLVED BY THE CITY COUNCIL OF THE CITY OF RIVIERA BEACH, PALM BEACH COUNTY, FLORIDA, AS FOLLOWS:

Section 1: That the Mayor and City Clerk are hereby authorized to execute the authorization to perform engineering services between R.C.T. Engineering, Inc. (R.C.T.) and the City of Riviera Beach in the amount of $38,711 for general professional engineering services for Utilities' Water Treatment, Distribution and Sewer Collection to review Inter-local Agreements, and to conduct various studies.

Section 2: That the City Council hereby accepts the proposed authorization by R.C.T. in the amount of $38,711 and that the Mayor and Finance Director are authorized to make payment for same under Account No. 401-1437-5330-3103.

Section 3: That the City Council hereby authorizes the Finance Director to transfer funds in the amount of $60,000 from the Utilities Contingency Account No. 401-1437-5330-5999) into the Professional Service-Engineering Account No. 401-1437-5330-3103.

Section 3: That a copy of the agreement between R.C.T. Engineering, Inc. and the City of Riviera Beach shall be attached hereto and made a part of this resolution.

Section 4: This Resolution shall take effect upon its passage and adoption by the City Council.

RESOLUTION NO. 75-01
PAGE 2

APPROVED:

MICHAEL D. BROWN,
MAYOR

EDWARD RODGERS,
CHAIRPERSON

DAVID G. SCHNYER
CHAIR PRO-TEM

(MUNICIPAL SEAL)

DONALD R. WILSON

ATTEST:

CARRIE E. WARD, CMC/AAE
CITY CLERK

SYLVIA LEE BLUE

ELIZABETH "LIZ" WADE
COUNCIL MEMBERS

MOTIONED BY: S. Blue

SECONDED BY: D. Schnyer

E. RODGERS	aye
E. WADE	aye
D. WILSON	absent
S. BLUE	aye
D. SCHNYER	aye

REVIEWED AS TO LEGAL SUFFICIENCY

CITY ATTORNEY
CITY OF RIVIERA BEACH

DATE: 5/4/01

RESOLUTION NO. 76-01

A RESOLUTION OF THE CITY COUNCIL OF THE CITY OF RIVIERA BEACH, PALM BEACH COUNTY, FLORIDA, AUTHORIZING THE LEASE-PURCHASE OF TWELVE (12) VEHICLES, FOR THE CITY'S POLICE DEPARTMENT FROM DUVAL FORD, INC., JACKSONVILLE, FLORIDA, UNDER THE FLORIDA SHERIFF'S ASSOCIATION CONTRACT NUMBER 00-08-0905; AUTHORIZING THE MAYOR AND CITY CLERK TO SIGN THE LEASE-PURCHASE AGREEMENT ON BEHALF OF THE CITY; AND AUTHORIZING THE MAYOR AND FINANCE DIRECTOR TO MAKE THREE (3) EQUAL PAYMENTS OF $103,746.25 FROM ACCOUNT NUMBER 305-0817-521-0-6401, TO FORD MOTOR CREDIT COMPANY, DEARBORN, MICHIGAN; AND PROVIDING AN EFFECTIVE DATE.

WHEREAS, the City leases police cars every year; and

WHEREAS, the City wishes to lease-purchase twelve (12) vehicles from Duval Ford, Inc., for a total cost of $311,238.75; and

WHEREAS, the City will own the vehicles at the end of the lease.

NOW, THEREFORE BE IT RESOLVED BY THE CITY COUNCIL OF THE CITY OF RIVIERA BEACH, PALM BEACH COUNTY, FLORIDA:

Section 1: That City Council approves the lease-purchase of twelve (12) Ford vehicles for the City's Police Department, from Duval Ford, Inc., Jacksonville, Florida, under the Florida Sheriff's Association Contract number 00-08-0905, for a total cost of $311,238.75.

Section 2: That the City Council accepts the Lease-Purchase Agreement, and authorizes the Mayor and City Clerk to sign the original Lease-Purchase Agreement between the City of Riviera Beach and Ford Motor Credit Company, for these vehicles, once said original Agreement has been forwarded to the City.

Section 3: That the Mayor and Finance Director are authorized to pay $103,746.25 from Account number 305-0817-521-0-6401, and make payment for the second and third years of the lease-purchase, respectively.

PASSED and APPROVED this 16TH **day of** MAY**, 2001.**

APPROVED:

MICHAEL D. BROWN
MAYOR

(MUNICIPAL SEAL)

EDWARD RODGERS
CHAIRPERSON

DAVID G. SCHNYER
CHAIR PRO-TEM

DONALD R. WILSON

SYLVIA LEE BLUE

ELIZABETH "LIZ" WADE
COUNCIL MEMBERS

ATTEST:

CARRIE E. WARD, CMC/AAE
CITY CLERK

MOTIONED BY:	S. Blue
SECONDED BY:	D. Schnyer
E. RODGERS	aye
D. SCHNYER	aye
D. WILSON	absent
S. BLUE	aye
E. WADE	aye

REVIEWED AS TO LEGAL SUFFICIENCY

Pamela H. Rogers
CITY ATTORNEY
CITY OF RIVIERA BEACH

DATE: 5/8/01

/jt
04-28-01

LEASE WITH OPTION TO PURCHASE AGREEMENT

Lessee
City of Riviera Beach
600 W. Blue Heron Blvd.
Riviera Beach, Florida 33404

Lessor
Kansas State Bank of Manhattan
1010 Westloop, P.O. Box 69
Manhattan, Kansas 66505-0069

DUPLICATE ORIGINAL

Dated as of January 24, 2001

This Lease With Option to Purchase Agreement dated as of the date listed above is between Lessor and Lessee listed directly above. Lessor desires to lease the Equipment described in Exhibit "A" to Lessee and Lessee desires to lease the Equipment from Lessor subject to the terms and conditions of this Agreement which are set forth below.

I. Definitions:

Section 1.01. Definitions. The following terms will have the meanings indicated below unless the context clearly requires otherwise:
"Additional Schedule" refers to the proper execution of additional Schedules to Exhibit A, Exhibit B, Exhibit C and Exhibit E as well as other exhibits or documents that may be required by the Lessor all of which relate to a lease of additional Equipment.
"Agreement" means this Lease with Option to Purchase Agreement and all Exhibits attached hereto.
"Budget Year" means the Lessee's fiscal year.
"Commencement Date" is the date when Lessee's obligation to pay rent begins.
"Equipment" means all of the items of Equipment listed on Exhibit "A" and all replacements, restorations, modifications and improvements.
"Lessee" means the entity listed above as Lessee and which is leasing the Equipment from Lessor under the provisions of this Agreement.
"Lessor" means the entity originally listed above as Lessor or any of its assignees.
"Lease Term" means the Original Term and all Renewal Terms.
"Original Term" means the period from the Commencement Date until the end of the Budget Year of Lessee.
"Renewal Term" means the annual term which begins at the end of the Original Term and which is simultaneous with Lessee's Budget Year.
"Rental Payments" means the payments Lessee is required to make under this Agreement as set forth on Exhibit "B".
"State" means the state in which Lessee is located.

II. Lessee Warranties

Section 2.01. Lessee represents, warrants and covenants as follows for the benefit of Lessor or its assignees:

(a) Lessee is an "issuer of tax exempt obligations" because Lessee is the State or a political subdivision of the State within the meaning of Section 103(a) of the Internal Revenue Code of 1986, as amended, (the "Code") or because Lessee is a constituted authority or district authorized to issue obligations on behalf of the State or political subdivision of the State within the meaning of Treasury Regulation 1.103-1(b).
(b) Lessee is authorized under the Constitution and laws of the State to enter into this Agreement, and has used such authority to properly execute and deliver this Agreement. Lessee has followed all proper procedures of its governing body in executing this Agreement. The Officer of Lessee executing this Agreement has the authority to execute and deliver this Agreement. This Agreement constitutes a legal, valid, binding and enforceable obligation of the Lessee in accordance with its terms.
(c) Lessee has complied with all statutory laws and regulations that may be applicable to the execution of this Agreement.
(d) Lessee shall use the Equipment only for essential, traditional government purposes.
(e) Should the IRS disallow the tax-exempt status of the Interest Portion of the Rental Payments as a result of the failure of the Lessee to use the Equipment for governmental purposes, then Lessee shall be required to pay additional sums to the Lessor or its assignees so as to bring the after tax yield to the same level as the Lessor or its assignees would attain if the transaction continued to be tax-exempt.
(f) Should the Lessee cease to be an issuer of tax exempt obligations or if the obligation of Lessee created under this Agreement ceases to be a tax exempt obligation for any reason, then Lessee shall be required to pay additional sums to the Lessor or its assignees so as to bring the after tax yield on this Agreement to the same level as the Lessor or its assignees would attain if the transaction continued to be tax-exempt.
(g) Lessee has never non-appropriated funds under an Agreement similar to this Agreement.
(h) Lessee will submit to the Secretary of the Treasury an information reporting statement as required by the Code.
(i) Upon request by Lessor, Lessee will provide Lessor with current financial statements, reports, budgets or other relevant fiscal information.
(j) Lessee shall retain the Equipment free of any hazardous substances as defined in the Comprehensive Environmental Response, Compensation and Liability Act, 42 U.S.C. 9601 et. seq. as amended and supplemented.
(k) Lessee presently intends to continue this Agreement for the Original Term and all Renewal Terms as set forth on Exhibit "B" hereto. The official of Lessee responsible for budget preparation will include in the budget request for each Budget Year the Rental Payments to become due in such Budget Year, and will use all reasonable and lawful means available to secure the appropriation of money for such Budget Year sufficient to pay the Rental Payments coming due therein. Lessee reasonably believes that moneys can and will lawfully be appropriated and made available for this purpose.

Section 2.02. Escrow Agreement. In the event both Lessor and Lessee mutually agree to utilize an Escrow Account, then immediately following the execution and delivery of this Agreement, Lessor and Lessee agree to execute and deliver and to cause Escrow Agent to execute and deliver the Escrow Agreement. This Agreement shall take effect only upon execution and delivery of the Escrow Agreement by the parties thereto. Lessor shall deposit or cause to be deposited with the Escrow agent for credit to the Equipment Acquisition Fund the sum of $N/A, which shall be held, invested and disbursed in accordance with the Escrow Agreement.

III. Acquisition of Equipment, Rental Payments and the Purchase Option Price

Section 3.01. Acquisition and Acceptance. Lessee shall be solely responsible for the ordering of the Equipment and for the delivery and installation of the Equipment. Execution of the Acceptance Certificate by an employee, official or agent of the Lessee having managerial, supervisory or procurement authority with respect to the Equipment shall constitute acceptance of the Equipment on behalf of the Lessee.

Section 3.02. Rental Payments. Lessee shall pay Rental Payments exclusively to Lessor or its assignees in lawful, legally available money of the United States of America. The Rental Payments shall be sent to the location specified by the Lessor or its assignees. The Rental Payments shall constitute a current expense of the Lessee and shall not constitute an indebtedness of the Lessee. Lessor shall have the option to charge interest at the highest lawful rate on any Rental Payment received later than the due date for the number of days that the Rental Payment(s) were late. Lessor shall also have the option, on monthly payments only, to charge a late fee of up to 10% of the monthly Rental Payment that is past due. The Rental Payments will be payable without notice or demand.

Section 3.03. Rental Payments Unconditional. Except as provided under Section 4.01, THE OBLIGATIONS OF LESSEE TO MAKE RENTAL PAYMENTS AND TO PERFORM AND OBSERVE THE OTHER COVENANTS CONTAINED IN THIS AGREEMENT SHALL BE ABSOLUTE AND UNCONDITIONAL IN ALL EVENTS WITHOUT ABATEMENT, DIMINUTION, DEDUCTION, SET-OFF OR DEFENSE.

Section 3.04. Purchase Option Price. Upon thirty (30) days written notice, Lessee shall have the option to pay, in addition to the Rental Payment, the corresponding Purchase Option Price which is listed on the same line on Exhibit B. If Lessee chooses this option and pays the Purchase Option Price to Lessor then Lessor will transfer any and all of it's rights, title and interest in the Equipment to Lessee.

Section 3.05. Lease Term. The Lease Term of the Agreement shall be the Original Term and all Renewal Terms until all the Rental Payments are paid as set forth on Exhibit B except as provided under Section 4.01 and Section 9.01 below. If, after the end of the budgeting process which occurs at the end of the Original Term or any Renewal Term, Lessee has not non-appropriated as provided for in this Agreement then the Lease Term shall be extended into the next Renewal Term and the Lessee shall be obligated to make all the Rental Payments that shall be due during such Renewal Term.

Section 3.06. Disclaimer of Warranties. LESSOR MAKES NO WARRANTY OR REPRESENTATION, EITHER EXPRESS OR IMPLIED, AS TO THE VALUE, DESIGN, CONDITION, MERCHANTABILITY, FITNESS FOR PARTICULAR PURPOSE OR ANY OTHER WARRANTY WITH RESPECT TO THE EQUIPMENT. LESSOR SHALL NOT BE LIABLE FOR ANY INCIDENTAL, INDIRECT, SPECIAL OR CONSEQUENTIAL DAMAGE ARISING OUT OF THE INSTALLATION, OPERATION, POSSESSION, STORAGE OR USE OF THE EQUIPMENT BY LESSEE.

IV. Non-Appropriation

Section 4.01. Non-Appropriation. If insufficient funds are available in Lessee's budget for the next Budget Year to make the Rental Payments for the next Renewal Term and the funds to make such Rental Payments are otherwise unavailable by any lawful means whatsoever, then Lessee shall have the option to non-appropriate the funds to pay the Rental Payments for the next Renewal Term. Lack of a sufficient appropriation shall be evidenced by the passage of an ordinance or resolution by the governing body of Lessee specifically prohibiting Lessee from performing its obligations under this Agreement and from using any moneys to pay the Rental Payments due under this Agreement for a designated Budget Year and all subsequent Budget Years. If Lessee chooses this option, then all obligations of the Lessee under this Agreement regarding Rental Payments for all remaining Renewal Terms shall be terminated at the end of the then current Original Term or Renewal Term without penalty or liability to the Lessee of any kind provided that if Lessee has not delivered possession of the Equipment to Lessor as provided herein and conveyed to Lessor or released its interest in the Equipment by the end of the last Budget Year for which Rental Payments were paid, the termination shall nevertheless be effective but Lessee shall be responsible for the payment of damages in an amount equal to the amount of the Rental Payments thereafter coming due under Exhibit "B" which are attributable to the number of days after such Budget Year during which Lessee fails to take such actions and for any other loss suffered by Lessor as a result of Lessee's failure to take such actions as required. Lessee shall immediately notify the Lessor as soon as the decision to non-appropriate is made. If such non-appropriation occurs, then Lessee shall deliver the Equipment to Lessor or to a location designated by Lessor at Lessee's expense. Lessee shall be liable for all damage to the Equipment other than normal wear and tear. If Lessee fails to deliver the Equipment to Lessor, then Lessor may enter the premises where the Equipment is located and take possession of the Equipment and charge Lessee for costs incurred.

V. Insurance, Damage, Insufficiency of Proceeds

Section 5.01. Insurance. Lessee shall maintain both casualty insurance and liability insurance at its own expense with respect to the Equipment. Lessee shall be solely responsible for selecting the insurer(s) and for making all premium payments and ensuring that all policies are continuously kept in effect during the period when Lessee is required to make Rental Payments. Lessee shall provide Lessor with a Certificate of Insurance which lists the Lessor and/or assigns as a loss payee and an additional insured on the policies with respect to the Equipment.

(a) Lessee shall insure the Equipment against any loss or damage by fire and all other risks covered by the standard extended coverage endorsement then in use in the State and any other risks reasonably required by Lessor in an amount at least equal to the then applicable Purchase Option Price of the Equipment. Alternatively, Lessee may insure the Equipment under a blanket insurance policy or policies.

(b) The liability insurance shall insure Lessor from liability and property damage in any form and amount satisfactory to Lessor.

(c) Lessee may self-insure against the casualty risks and liability risks described above. If Lessee chooses this option, Lessee must furnish Lessor with a certificate and/or other documents which evidences such coverage.

(d) All insurance policies issued or affected by this Section shall be so written or endorsed such that the Lessor and its assignees are named additional insureds and loss payees and that all losses are payable to Lessee and Lessor or its assignees as their interests may appear. Each policy issued or affected by this Section shall contain a provision that the insurance company shall not cancel or materially modify the policy without first giving thirty (30) days advance notice to Lessor or its assignees. Lessee shall furnish to Lessor certificates evidencing such coverage throughout the Lease Term.

Section 5.02. Damage to or Destruction of Equipment. Lessee assumes the risk of loss or damage to the Equipment. If the Equipment or any portion thereof is lost, stolen, damaged, or destroyed by fire or other casualty, Lessee will immediately report all such losses to all possible insurers and take the proper procedures to attain all insurance proceeds. At the option of Lessor, Lessee shall either (1) apply the Net Proceeds to replace, repair or restore the Equipment or (2) apply the Net Proceeds to the applicable Purchase Option Price. For purposes of this Section and Section 5.03, the term Net Proceeds shall mean the amount of insurance proceeds collected from all applicable insurance policies after deducting all expenses incurred in the collection thereof.

Section 5.03. Insufficiency of Net Proceeds. If there are no Net Proceeds for whatever reason or if the Net Proceeds are insufficient to pay in full the cost of any replacement, repair, restoration, modification or improvement of the Equipment, then Lessee shall, at the option of Lessor, either (1) complete such replacement, repair, restoration, modification or improvement and pay any costs thereof in excess of the amount of the Net Proceeds or (2) apply the Net Proceeds to the Purchase Option Price and pay the deficiency, if any, to the Lessor.

Section 5.04. Lessee Negligence. Lessee assumes all risks and liabilities, whether or not covered by insurance, for loss or damage to the Equipment and for injury to or death of any person or damage to any property whether such injury or death be with respect to agents or employees of Lessee or of third parties, and whether such property damage be to Lessee's property or the property of others (including, without limitation, liabilities for loss or damage related to the release or threatened release of hazardous substances under the Comprehensive Environmental Response, Compensation and Liability Act, the Resource Conservation and Recovery Act or similar or successor law or any State or local equivalent now existing or hereinafter enacted which in any manner arise out of or are incident to any possession, use, operation, condition or storage of any Equipment by Lessee) which is proximately caused by the negligent conduct of Lessee, its officers, employees and agents. Lessee hereby assumes responsibility for and agrees to reimburse Lessor for all liabilities, obligations, losses, damages, penalties, claims, actions, costs and expenses (including reasonable attorneys' fees) of whatsoever kind and nature, imposed on, incurred by or asserted against Lessor that in any way relate to or arise out of a claim, suit or proceeding, based in whole or in part upon the negligent conduct of Lessee, its officers, employees and agents, to the maximum extent permitted by law.

VI. Title and Security Interest

Section 6.01. Title. Title to the Equipment shall vest in Lessee when Lessee acquires and accepts the Equipment. Title to the Equipment will automatically transfer to the Lessor in the event Lessee non-appropriates under Section 4.01 or in the event Lessee defaults under Section 9.01. In either of such events, Lessee shall execute and deliver to Lessor such documents as Lessor may request to evidence the passage of legal title to the Equipment to Lessor.

Section 6.02. Security Interest. To secure the payment of all Lessee's obligations under this Agreement, Lessee hereby grants to Lessor a security interest under the Uniform Commercial Code constituting a first lien on the Equipment described more fully on Exhibit "A". The security interest established by this section includes not only all additions, attachments, repairs and replacements to the Equipment but also all proceeds therefrom.

VII. Assignment

Section 7.01. Assignment by Lessor. All of Lessor's rights, title and/or interest in and to this Agreement may be assigned and reassigned in whole or in part to one or more assignees or sub-assignees (including a Registered Owner for Lease Participation Certificates) by Lessor at any time without the consent of Lessee. No such assignment shall be effective as against Lessee until the assignor shall have filed with Lessee written notice of assignment identifying the assignee. Lessee shall pay all Rental Payments due hereunder relating to such Equipment to or at the direction of Lessor or the assignee named in the notice of assignment. Lessee shall keep a complete and accurate record of all such assignments.

Section 7.02. Assignment by Lessee. None of Lessee's right, title and interest under this Agreement and in the Equipment may be assigned by Lessee unless Lessor approves of such assignment in writing before such assignment occurs and only after Lessee first obtains an opinion from nationally recognized counsel stating that such assignment will not jeopardize the tax-exempt status of the obligation.

VIII. Maintenance of Equipment

Section 8.01. Lessee shall keep the Equipment in good repair and working order. Lessor shall have no obligation to inspect, test, service, maintain, repair or make improvements or additions to the Equipment under any circumstances. Lessee will be liable for all damage to the Equipment, other than normal wear and tear, caused by Lessee, its employees or its agents. Lessee shall pay for and obtain all permits, licenses and taxes necessary for the installation, operation, possession, storage or use of the Equipment. If the Equipment includes any titled vehicle(s), then Lessee is responsible for obtaining such title(s) from the State and also for ensuring that Lessor is listed as First Lienholder on all of the title(s). Lessee shall not use the Equipment to haul, convey or transport hazardous waste as defined in the Resource Conservation and Recovery Act, 42 U.S.C. 6901 et. seq. Lessee shall not during the term of this Agreement create, incur or assume any levies, liens or encumbrances of any kind with respect to the Equipment except those created by this Agreement. Lessee agrees that Lessor or its Assignee may execute any additional documents including financing statements, affidavits, notices, and similar instruments, for and on behalf of Lessee which Lessor deems necessary or appropriate to protect Lessor's interest in the Equipment and in this Agreement. The Equipment is and shall at all times be and remain personal property. Lessee shall allow Lessor to examine and inspect the Equipment at all reasonable times.

IX. Default

Section 9.01. Events of Default defined. The following events shall constitute an "Event of Default" under this Agreement:

(a) Failure by Lessee to pay any Rental Payment listed on Exhibit "B" for fifteen (15) days after such payment is due according to the Payment Date listed on Exhibit "B".

(b) Failure to pay any other payment required to be paid under this Agreement at the time specified herein and a continuation of said failure for a period of fifteen (15) days after written notice by Lessor that such payment must be made. If Lessee continues to fail to pay any payment after such period, then Lessor may, but will not be obligated to, make such payments and charge Lessee for all costs incurred plus interest at the highest lawful rate.

(c) Failure by Lessee to observe and perform any warranty, covenant, condition, promise or duty under this Agreement for a period of thirty (30) days after written notice specifying such failure is given to Lessee by Lessor, unless Lessor agrees in writing to an extension of time. Lessor will not unreasonably withhold its consent to an extension of time if corrective action is instituted by Lessee. Subsection (c) does not apply to Rental Payments and other payments discussed above.

(d) Any statement, material omission, representation or warranty made by Lessee in or pursuant to this Agreement which proves to be false, incorrect or misleading on the date when made regardless of Lessee's intent and which materially adversely affects the rights or security of Lessor under this Agreement.

(e) Any provision of this Agreement which ceases to be valid for whatever reason and the loss of such provision would materially adversely affect the rights or security of Lessor.

(f) Lessee admits in writing its inability to pay its obligations. Lessee defaults on one or more of its other obligations. Lessee applies or consents to the appointment of a receiver or a custodian to manage its affairs. Lessee makes a general assignment for the benefit of creditors.

Section 9.02. Remedies on Default. Whenever any Event of Default exists, Lessor shall have the right to take one or any combination of the following remedial steps:

With or without terminating this Agreement, Lessor may declare all Rental Payments and other amounts payable by Lessee hereunder to the end of the then current Budget Year to be immediately due and payable.

With or without terminating this Agreement, Lessor may require Lessee at Lessee's expense to redeliver any or all of the Equipment to Lessor to a location specified by Lessor. Such delivery shall take place within fifteen (15) days after the event of default occurs. If Lessee fails to deliver the Equipment, Lessor may enter the premises where the Equipment is located and take possession of the Equipment and charge Lessee for cost incurred. Notwithstanding that Lessor has taken possession of the Equipment, Lessee shall still be obligated to pay the remaining Rental Payments due up until the end of the then current Original Term or Renewal Term. Lessee will be liable for any damage to the Equipment caused by Lessee or its employees or agents.

(c) Lessor may take whatever action at law or in equity that may appear necessary or desirable to enforce its rights.

Section 9.03. No Remedy Exclusive. No remedy herein conferred upon or reserved to Lessor is intended to be exclusive and every such remedy shall be cumulative and shall be in addition to every other remedy given under this Agreement now or hereafter existing at law or in equity. No delay or omission to exercise any right or power accruing upon any default shall impair any such right or shall be construed to be a waiver thereof.

DUPLICATE ORIGINAL

X. Miscellaneous

Section 10.01. Notices. All notices shall be sufficiently given and shall be deemed given when delivered or mailed by registered mail, postage prepaid, to the parties at their respective places of business as first set forth herein or as the parties shall designate hereafter in writing.

Section 10.02. Binding Effect. This Agreement shall inure to the benefit of and shall be binding upon Lessee and Lessor and their respective successors and assigns.

Section 10.03. Severability. In the event any provision of this Agreement shall be held invalid or unenforceable by any court of competent jurisdiction, such holding shall not invalidate or render unenforceable any other provision hereof.

Section 10.04. Amendments, Addenda, Changes or Modifications. This Agreement may be amended, added to, changed or modified by written agreement duly executed by Lessor and Lessee.

Section 10.05. Execution in Counterparts. This Agreement may be simultaneously executed in several counterparts, each of which shall be an original and all of which shall constitute but one and the same instrument.

Section 10.06. Captions. The captions or headings in this Agreement do not define, limit or describe the scope or intent of any provisions or sections of this Agreement.

Section 10.07. Master Lease. This Agreement can be utilized as a Master Lease Agreement. This means that the Lessor and the Lessee may agree to the lease of additional Equipment under this Agreement at some point in the future by executing one or more Additional Schedules to Exhibit A, Exhibit B, Exhibit C and Exhibit E as well as other exhibits or documents that may be required by Lessor. Additional Schedules will be consecutively numbered on each of the exhibits which make up the Additional Schedule and all the terms and conditions of the Agreement shall govern each Additional Schedule.

Section 10.08. Entire Writing. This Agreement constitutes the entire writing between Lessor and Lessee. No waiver, consent, modification or change of terms of this Agreement shall bind either party unless in writing and signed by both parties, and then such waiver, consent, modification or change shall be effective only in the specific instance and for the specific purpose given. There are no understandings, agreements, representations, conditions, or warranties, express or implied, which are not specified herein regarding this Agreement or the Equipment leased hereunder. Any terms and conditions of any purchase order or other documents submitted by Lessee in connection with this Agreement which are in addition to or inconsistent with the terms and conditions of this Agreement will not be binding on Lessor and will not apply to this Agreement.

Lessor and Lessee have caused this Agreement to be executed in their names by their duly authorized representatives listed below.

CITY OF RIVIERA BEACH	KANSAS STATE BANK OF MANHATTAN
Signature	Signature
MICHAEL D. BROWN, MAYOR	MICHAEL H. DANIELS, PRESIDENT
Typed Name and Title	Typed Name and Title

EXHIBIT A

DESCRIPTION OF EQUIPMENT

DUPLICATE ORIGINAL

***RE:* Lease With Option to Purchase Agreement dated as of January 24, 2001, between Kansas State Bank of Manhattan (Lessor) and City of Riviera Beach (Lessee)**

Below is a detailed description of all the items of Equipment including quantity, model number and serial number where applicable:

Thirty (30) Scott AP50s with Carbon Bottles and Pak Alerts

Location of Equipment:_____

DUPLICATE ORIGINAL

EXHIBIT D

OPINION OF COUNSEL

(Must be Re-typed onto attorney's letterhead)

(Current Date)

Kansas State Bank of Manhattan
1010 Westloop, P.O. Box 69
Manhattan, Kansas 66505-0069

Re: Lease With Option to Purchase Agreement dated as of January 24, 2001, between Kansas State Bank of Manhattan (Lessor) and City of Riviera Beach (Lessee)

Ladies and Gentlemen:

As legal counsel to Lessee, I have examined the foregoing Agreement and such other opinions, documents and matters of law as I have deemed necessary in connection with this Agreement. Based on the foregoing, I am of the following opinions:

1. Lessee is a duly organized political subdivision of the State within the meaning of Section 103(a) of the Internal Revenue Code of 1986 or Lessee is a constituted authority authorized to issue obligations on behalf of a state or political subdivision within the meaning of Treasury Regulation 1.103-3(b).
2. Lessee has the requisite power and authority to purchase the Equipment and to execute and deliver the Agreement and to perform its obligations under the Agreement. The Agreement and the other documents either attached thereto or required therein have been duly authorized, approved and executed by and on behalf of Lessee, and the Agreement is a legal, valid and binding obligation of Lessee enforceable in accordance with its terms.
3. The authorization, approval and execution of the Agreement and all other proceedings of Lessee relating to the transactions contemplated thereby have been performed in accordance with all open meeting laws, public bidding laws and all other applicable state and federal laws.
4. There is no proceeding pending or threatened in any court or before any governmental authority or arbitration board or tribunal that, if adversely determined, would adversely affect the transactions contemplated by the Agreement or the security interest of Lessor or its assigns, as the case may be, in the Equipment. All capitalized terms therein shall have the same meaning as in the foregoing Agreement.
5. The above opinion is for the sole benefit of the Lessor listed above and can only be relied upon by the Lessor or any permitted assignee or subassignee of Lessor under the agreement.

Signature of Legal Counsel

Schedule (01)

EXHIBIT E

LESSEE RESOLUTION

DUPLICATE ORIGINAL

RE: Lease With Option to Purchase Agreement dated as of January 24, 2001, between Kansas State Bank of Manhattan (Lessor) and City of Riviera Beach (Lessee)

At a duly called meeting of the Governing Body of the Lessee (as defined in the Agreement) held on February 7, 2001 the following resolution was introduced and adopted:

BE IT RESOLVED by the Governing Body of Lessee as follows:

1. **Determination of Need.** The Governing Body of Lessee has determined that a true and very real need exists for the acquisition of the Equipment described on Exhibit A of the Lease With Option to Purchase Agreement dated as of January 24, 2001, between City of Riviera Beach (Lessee) and Kansas State Bank of Manhattan (Lessor).

2. **Approval and Authorization.** The Governing Body of Lessee has determined that the Agreement, substantially in the form presented to this meeting, is in the best interests of the Lessee for the acquisition of such Equipment, and the Governing Body hereby approves the entering into of the Agreement by the Lessee and hereby designates and authorizes the following person(s) to execute and deliver the Agreement on Lessee's behalf with such changes thereto as such person(s) deem(s) appropriate, and any related documents, including any Escrow Agreement, necessary to the consummation of the transaction contemplated by the Agreement.

   Authorized Individual(s): MICHAEL D. BROWN, MAYOR
   (Printed or Typed Name and Title of individual(s) authorized to execute the Agreement)

3. **Adoption of Resolution.** The signatures below from the designated individuals from the Governing Body of the Lessee evidence the adoption by the Governing Body of this Resolution.

Signature: _____
(Signature of Secretary, Board Chairman or other member of the Governing Body)

Typed Name & Title CARRIE E. WARD, CITY CLERK, CMC/AAE
(Typed Name and Title of individual who signed directly above)

Attested By: _____
(Signature of one additional person who can witness the passage of this Resolution)

Typed Name & Title: CARRIE E. WARD, CITY CLERK, CMC/AAE
(Typed name of individual who signed directly above)

Schedule (01)

DUPLICATE ORIGINAL

EXHIBIT F

BANK QUALIFIED CERTIFICATE

RE: Lease With Option to Purchase Agreement dated as of January 24, 2001, between Kansas State Bank of Manhattan (Lessor) and City of Riviera Beach (Lessee)

Whereas, Lessee hereby represents that it is a "Bank Qualified" Issuer for the calendar year in which this Agreement is executed by making the following designations with respect to Section 265 of the Internal Revenue Code. (A "Bank Qualified Issuer" is an issuer that issues less than ten million ($10,000,000) dollars of tax-exempt obligations during the calendar year).

Now, therefor, Lessee hereby designates this Agreement as follows:

1. **Designation as Qualified Tax-Exempt Obligation.** Pursuant to Section 265(b)(3)(B)(i) of the Internal Revenue Code of 1986 as amended (the "Code"), the Lessee hereby specifically designates the Agreement as a "qualified tax-exempt obligation" for purposes of Section 265(b)(3) of the Code. In compliance with Section 265(b)(3)(D) of the Code, the Lessee hereby represents that the Lessee will not designate more than $10,000,000 of obligations issued by the Lessee in the calendar year during which the Agreement is executed and delivered as such "qualified tax-exempt obligations".

2. **Issuance Limitation.** In compliance with the requirements of Section 265(b)(3)(C) of the Code, the Lessee hereby represents that the Lessee (including all subordinate entities of the Lessee within the meaning of Section 265(b)(3)(E) of the Code) reasonably anticipates not to issue in the calendar year during which the Agreement is executed and delivered, obligations bearing interest exempt from federal income taxation under Section 103 of the Code (other than "private activity bonds" as defined in Section 141 of the Code) in an amount greater than $10,000,000.

City of Riviera Beach

Signature

MICHAEL D. BROWN, MAYOR

Typed Name and Title

INSURANCE REQUIREMENTS

Pursuant to Article V in the Lease With Option to Purchase Agreement, you have agreed to provide us evidence of insurance covering the property in the Agreement. A Certificate of Insurance naming all insured parties and coverages must be determined to us as soon as possible, but no later than the date on which delivery of equipment occurs. **If you have not taken possession of the equipment, please write a memo to Kansas State Bank stating your carrier, insurance agent and telephone number to reach them upon delivery.**

DUPLICATE ORIGINAL

In the case of self-insurance, the amounts of liability and physical damage coverage are to be listed on some form of certificate supplied by you. In addition, information regarding the nature of your self-insurance program should also be forwarded to us as soon as possible.

INSURANCE REQUIREMENTS BY KANSAS STATE BANK OF MANHATTAN:

1. **LIABILITY**
   - ✓ *Minimum of $1,000,000.00 combined single-limit on bodily injury and property damage.*
   - ✓ *Kansas State Bank and/or Its Assigns MUST be listed as additional insured and loss payee.*

2. **PHYSICAL DAMAGE**
   - ✓ *All risk coverage to guarantee proceeds sufficient to pay the applicable Purchase Option Price as set forth in Exhibit B of the Agreement. Kansas State Bank and/or Its Assigns MUST be listed as additional insured and loss payee.*

3. **ENDORSEMENT**
   - ✓ *Lessor will receive at least thirty (30) days written notice from Insurer prior to alteration, cancellation or reduction of insurance coverage.*

PLEASE FAX THE CERTIFICATE TO US AS SOON AS POSSIBLE AT (785) 537-4806, AND MAIL THE ORIGINAL TO:

Kansas State Bank and/or Its Assigns
1010 Westloop, P.O. Box 69
Manhattan, Kansas 66505-0069

YOUR ASSISTANCE IS GREATLY APPRECIATED TO COMPLETE THIS TRANSACTION, IF YOU HAVE ANY QUESTIONS, PLEASE GIVE US A CALL AT (800) 752-3562.

City of Riviera Beach

Insurance Company: ARTHUR J. GALLAGHER & CO.

Agent's Name: JORI VANDERVOORT

Telephone & Fax #'s: PH: 10800-488-3003 / FAX: (305) 592-4049

Address, City, State & Zip: KOGER EXECUTIVE CTR., 8300 NW 53RD ST., STE 350, MIAMI, FL 33166

Form **8038-GC**
(Rev. May 1999)
Department of the Treasury
Internal Revenue Service

Information Return for Small Tax-Exempt Governmental Bond Issues, Leases, and Installment Sales

▶ Under Internal Revenue Code section 149(e)

Caution: Use Form 8038-G if the issue price of the issue is $100,000 or more.

OMB No. 1545-0720

DUPLICATE ORIGINAL

Part I Reporting Authority — Check box if Amended Return ▶ ☐

1. Issuer's name: City of Riviera Beach
2. Issuer's employer identification number: 59 600417
3. Number and street (or PO Box if mail is not delivered to street address): 600 W. Blue Heron Blvd. — Room/Suite
4. City, town, or post office, state, and ZIP code: Riviera Beach, Florida 33404
5. Report number: GC -
6. Name and title of officer or legal representative whom the IRS may call for more information: DENNIS WIDLANSKY, FINANCE DIRECTOR
7. Telephone number of officer or legal representative: (561) 845-4040

Part II Description of Obligations (Check if reporting: a single issue ☐ or on a consolidated basis ☐)

8a	Issue price of obligation(s) (see instructions)	8a	$
b	Issue date (single issue) or calendar year (consolidated) (see instructions) ▶ ___/___/___		
9	Amount of the reported obligation(s) on line 8a:		
a	Used to refund prior issue(s)	9a	
b	Representing a loan from the proceeds of another tax-exempt obligation (e.g., bond bank)	9b	
10	If the issuer has designated any issue under section 265(b)(3)(B)(i)(III) (small issuer exception), check this box ▶		☐
11	If any obligation is in the form of a lease or installment sale, check this box ▶		☐
12	If the issuer has elected to pay a penalty in lieu of arbitrage rebate, check this box ▶		☐

Please Sign Here

Under penalties of perjury, I declare that I have examined this return and accompanying schedules and statements, and, to the best of my knowledge and belief, they are true, correct, and complete.

▶ Veronique G. Rellford — Issuer's authorized representative
02-07-01 — Date
▶ VERONIQUE G. RELLFORD PURCHASING DI — Type or print name and title

GENERAL INSTRUCTIONS

Section references are to the Internal Revenue Code unless otherwise noted.

Purpose of Form

Form 8038-GC is used by the issuers of tax-exempt governmental obligations to provide the IRS with information required by section 149(e) and to monitor the requirements of sections 141 - 150.

Who Must File

Issuers of tax-exempt governmental obligations with issue prices of less than $100,000 must file Form 8038-GC. Issuers of a tax-exempt govern-mental obligation with an issue price of $100,000 or more must file Form 8038-G, *Information Return for Tax-Exempt Governmental Obligations.*

Filing a separate return–Issuers have the option to file a separate Form 8038-GC for any tax-exempt governmental obligation with an issue price of less than $100,000.

An issuer of a tax-exempt bond used to finance construction expenditures must file a separate Form 8038-GC for each issue to give notice to the IRS that an election was made to pay a penalty in *lieu of arbitrage rebate (see the line 12 instructions).*

Filing a consolidated return–For all tax-exempt governmental *obligations with issue prices of less than $100,000 that are not* reported on a separate Form 8038-GC, an issuer must file a consolidated information return including all such issues issued within the calendar year.

Thus, an issuer may file a separate Form 8038-GC for each of a number of small issues and report the remainder of small issues issued during the calendar year on one consolidated Form 8038-GC. *However, a separate Form 8038-GC must be filed to give the IRS* notice of the election to pay a penalty in lieu of arbitrage rebate.

When to File

To file a separate return, file Form 8038-GC on or before the 15th day of the second calendar month after the close of the calendar quarter in which the issue is issued.

To file a consolidated return, file Form 8038-GC on or before *February 15th of the calendar year in which the issue is issued.*

Late filing. An issuer may be granted an extension of time to file Form 8038-GC under Section 3 of Rev. Proc. 88-10, 1988-1 C.B.635, if it is determined that the failure to file on time is not due to willful neglect. Type or print at the top of the form, "This Statement is Submitted in Accordance with Rev. Proc. 88-10." Attach to the Form 8038-GC a letter briefly stating why the form was not submitted to the IRS on time. Also indicate whether the obligation in question is under examination by the IRS. Do not submit copies of any bond documents, leases, or installment sale documents.

Where to File

File Form 8038-GC with the Internal Revenue Service Center, Ogden, UT 84201.

Other Forms that May be Required

For rebating arbitrage (or paying a penalty in lieu of arbitrage rebate) to the Federal government, use Form 8038-T, *Arbitrage Rebate and Penalty in Lieu of Arbitrage Rebate.* For private activity bonds, use Form 8038, *Information Return for Tax-Exempt Private Activity Bond Issues.*

Rounding to Whole Dollars

You may show the money items on this return as whole-dollar amounts. To do so, drop any amount less than 50 cents and increase any amount from 50 cents through 99 cents to the next higher dollar.

Definitions

Obligations. This refers to a single tax-exempt governmental obligation if Form 8038-GC is used for separate reporting or to multiple tax-exempt governmental obligations if the form is used for consolidated reporting.

Tax-exempt obligation. This is a bond, installment purchase agreement, or financial lease, on which the interest is excluded from income under section 103.

Tax-exempt governmental obligation. A tax-exempt obligation that is not a private activity bond, (see below) is a tax-exempt governmental obligation. This includes a bond issued by a qualified volunteer fire department under section 150(e).

Private activity bond. This includes an obligation issued as part of *an issue in which:*

More than 10% of the proceeds are to be used for any private activity business use

RESOLUTION NO. 77-01

A RESOLUTION OF THE CITY COUNCIL OF THE CITY OF RIVIERA BEACH, PALM BEACH COUNTY, FLORIDA, RENEWING THE CITY ATTORNEY EMPLOYMENT AGREEMENT BETWEEN THE CITY OF RIVIERA BEACH, FLORIDA AND PAMALA H. RYAN; AUTHORIZING THE MAYOR AND CITY CLERK TO EXECUTE SAID AGREEMENT; AND PROVIDING AN EFFECTIVE DATE.

BE IT RESOLVED, BY THE CITY COUNCIL OF THE CITY OF RIVIERA BEACH, PALM BEACH COUNTY, FLORIDA, as follows:

SECTION ONE. That the City Council hereby renews the City Attorney Employment Agreement between the City of Riviera Beach, Florida and Pamala H. Ryan.

SECTION TWO. That a copy of the Employment Agreement is attached hereto and made a part of this Resolution.

SECTION THREE. This Resolution shall take effect immediately upon its passage and approval by the City Council.

PASSED and APPROVED this 16th day of May 2001.

APPROVED:

Michael D. Brown
Mayor

Attest:

[Municipal Seal]

Carrie E. Ward, CMC/AAE
City Clerk

Edward Rodgers
Chairman

David G. Schnyer
Chairperson Pro Tem

Donald R. Wilson

Sylvia Lee Blue

Elizabeth "Liz" Wade
Council Members

RESOLUTION NO. 77-01
-2-

Motioned by: E. Wade

Seconded by: S. Blue

E. Rodgers	nay
D. Schnyer	aye
D. Wilson	absent
S. Blue	aye
E. Wade	aye

[PHR: dpm050901]

REVIEWED FOR LEGAL SUFFICIENCY

Asst. CITY ATTORNEY
CITY OF RIVIERA BEACH

DATE: 05.09.01

CITY ATTORNEY EMPLOYMENT AGREEMENT

THIS AGREEMENT is made and entered into this 16 day of May, 2001 by and between the CITY OF RIVIERA BEACH, State of Florida, duly organized and validly existing municipal corporation, (hereinafter referred to as "City"), and PAMALA H. RYAN, (hereinafter referred to as "Employee").

IN CONSIDERATION of the mutual promises hereinafter set forth, the City and Employee do mutually agree as follows:

Section 1. Duties -

A. The City agrees to employ Employee as City Attorney on a full time basis as the chief legal officer of the City and head of the City's Legal Department.

B. Employee agrees to perform the duties and functions of the City Attorney as specified in the City Charter and Code of Ordinances of the City of Riviera Beach, Florida, and agrees to perform such other legally permissible and proper duties and functions as the City Council shall from time to time require.

Section 2. Salary and Term of Agreement -

A. In consideration of the services to be performed by Employee, the City agrees to pay Employee an annual base salary of $84,068.60, payable in installments at the same time as other management employees are paid. Further, Employee shall receive and be

entitled to all longevity, cost of living/wage adjustment increases and other increases which the City grants to other management employees.

B. Employee's term of employment shall be for one year. This agreement shall be renewed automatically on an annual basis for one-year terms unless either party notifies the other in writing at least ninety days prior to the expiration of the term that it does not wish to renew.

C. Subject to the provisions set forth in Section 3 below, Employee serves at the pleasure of the City Council and nothing in this agreement shall prevent, limit, or otherwise interfere with the right of the City to terminate the employment of Employee.

D. Subject to the provisions set forth in Section 3 below, nothing in this agreement shall prevent, limit, or otherwise interfere with the right of Employee to resign the position of the City Attorney.

Section 3. Termination and Severance Pay –

A. The City Council may at any time, terminate the employment of Employee under this agreement at the City's pleasure and without cause. If termination of employment occurs prior to the expiration of this agreement, Employee shall be entitled to three months salary and all other accumulated employment benefits per City policy as Employee's severance pay. In consideration of payment of severance, Employee shall execute a general release in favor of the City, its successors and assigns.

B. In the event the Employee voluntarily resigns the position of City Attorney prior to the expiration of this agreement, Employee shall provide the City with thirty days written notice of said resignation. Upon receipt of such notice, the City at its option, may require Employee to terminate her employment at an earlier date than set forth in the notice of resignation, provided that the City may not require Employee to terminate her employment less than ten days after receipt of said notice. In such event, the City's obligation shall be to pay Employee for all time actually worked, as well as all remaining accrued employment benefits pursuant to city policy; said sums to be paid prior to the conclusion of Employee's employment.

Section 4. Benefits -

The City shall provide Employee with all of the benefits accruing to City employees in management positions, except to the extent modified by this agreement.

Section 5. Retirement -

Employee will continue to participate as a member of the City Managed Retirement System.

Section 6. Deferred Compensation -

The City will pay Employee annual deferred compensation in an amount of $4,000. Said deferred compensation shall be paid to the Public Employees Benefit Services Corporation (PEBSCO). Such payments shall be made on a bi-weekly basis or at such other pay periods as may be

established by the City until the maximum annual contribution has been made. Upon expiration of this agreement, or upon either termination or resignation of the Employee, the City agrees to transfer ownership of said plan at Employee's direction.

Section 7. Insurance -

The City will provide Employee with individual and dependent medical and dental insurance coverage, paid in full, equivalent to such insurance generally provided to City employees in management positions. Further, the City shall pay for a Long Term Disability policy which will pay Employee sixty percent (60%) of her compensation. The City will provide Employee with Term Life Insurance, fully paid by the City, with a face value of $160,000. Employee acknowledges that the Long Term Disability and the Term Life Insurance policies referenced above will be selected solely by Employee, and the City is not responsible for the quality, quantity or adequacy of said policies.

Section 8. Vacation -

Employee shall be entitled to twenty days paid vacation annually. Any unused vacation days shall accrue to Employee in accordance with City policy.

Section 9. Sick Days -

Employee shall be entitled to twelve sick days per year. Any unused sick days shall accrue to Employee in accordance with City policy.

Section 10. Transportation Allowance -

The City shall pay Employee the sum of $350.00 per month for a transportation allowance. Employee shall not seek, and is not entitled to, reimbursement for vehicular travel within 150 miles of the City.

Section 11. Dues and Subscriptions -

The City will provide the Employee with a budget of no less than $1000.00 annually for membership fees and dues in professional organizations, including the Florida Bar, the American Bar Association, and the National Bar Association, and for subscriptions relevant to fulfilling the duties as City Attorney.

Section 12. Professional Development -

The City will provide the Employee with a budget of no less than $1000.00 annually for personal training relative to professional development and growth, including mandatory continuing legal education required by the Florida Bar.

Section 13. Evaluation -

The City Council may initiate an evaluation of Employee's performance at any time during the agreement. The evaluation may set forth findings of fact and future goals requested of Employee. The procedure may be established by the City Council. The results of the evaluation shall be given to Employee and she shall be provided adequate opportunity to discuss the evaluation with the City Council. Said evaluation is not mandatory.

Section 14. Indemnification of Employees -

The City agrees, pursuant to Section 111.07, Florida Statutes, and the City of Riviera Beach Code, to provide reasonable attorney's fees and other expenses of litigation to defend any civil action arising from a complaint for damages or injuries suffered as a result of any act or omission of Employee while serving as the City Attorney arising out of and in the scope of her employment or function as well as costs, disbursements, claims, payments, judgments, or settlements resulting from any lawsuit or claim, unless in the case of a tort action Employee has been determined in final judgment to have caused the harm intentionally, in bad faith, with malicious purpose, or in a manner exhibiting wanton and willful disregard to human rights, safety, or property. In addition, the City agrees to provide reasonable attorney's fees and costs to defend criminal investigation or prosecution of Employee while serving as the City Attorney arising out of or in the scope of her employment. A reasonable fee should not exceed the amount the City pays for its attorney, but in any case should not exceed $200 per hour without prior approval of the Council. Said indemnification provision to continue in effect after termination of employment.

Section 15. Residency -

Employee is currently a resident of the City of Riviera Beach, and agrees to remain a resident for the duration of this agreement.

Section 16. General Provision –

The text of this document constitutes the entire agreement between the parties and may be modified only in writing by the parties.

IN WITNESS WHEREOF, the City of Riviera Beach has caused this agreement to be signed and executed in its behalf by the Mayor, and duly attested by the City Clerk, and Employee has signed and executed this agreement, in duplicate, on the date set forth above.

THE CITY OF RIVIERA BEACH

BY: _____
Michael D. Brown, Mayor

_____
Pamala H. Ryan, Employee

ATTEST:

_____
Carrie E. Ward, CMC/AAE
City Clerk

REVIEWED AS TO LEGAL SUFFICIENCY

By: _____

Date: _____

RESOLUTION NO. 78-01

A RESOLUTION OF THE CITY COUNCIL OF THE CITY OF RIVIERA BEACH, PALM BEACH COUNTY, FLORIDA, AWARDING THE BID FOR SUMMER PROGRAM FOOD MANAGEMENT SERVICE TO PASSPORT PIZZZA, INC. OF BOCA RATON, FLORIDA IN THE AMOUNT OF $82,896; AND AUTHORIZING THE MAYOR AND FINANCE DIRECTOR TO SET UP A BUDGET AND PROVIDING AN EFFECTIVE DATE.

WHEREAS, the City of Riviera Beach Parks and Recreation Department is providing a Summer Program – Food Management service for its participants; and

WHEREAS, the State of Florida provided certain funds to manage this program at Wells and Tate Recreational Facilities; and

WHEREAS, Passport Pizza, Inc. submitted the lowest bid as a food service provider for the Summer Camp Program.

WHEREAS, directing the Finance Director to set up a budget for the Food Service.

NOW THEREFORE, BE IT RESOLVED BY THE CITY COUNCIL OF THE CITY OF RIVIERA BEACH, PALM BEACH COUNTY, FLORIDA THAT:

SECTION 1. That the City Council approve the award of bid to Passport Pizza, Inc. of Boca Raton, Florida as the food service provider for the Summer Program.

SECTION 2. That the Finance Director is hereby authorized to set up a Budget for the Summer Food Service Program as follows:

REVENUE		
111-334-515	State Food Grant	$ 96,892
EXPENDITURE		
111-1232-5720-1201	Salaries	$27,350
111-1232-5720-1401	FICA	$ 2,103
111-1232-5720-3406	Contract Services	$66,489
111-1232-5720-5201	Operational Supplies	$ 950

SECTION 3. That this Resolution shall take effect upon its passage and adoption by the City Council.

PASSED AND ADOPTED this 6th day of June, 2001.

EDWARD RODGERS
CHAIRPERSON

APPROVED:

MICHAEL D. BROWN
MAYOR

DAVID G. SCHNYER
CHAIR PRO-TEM

DONALD R. WILSON

SYLVIA LEE BLUE

ELIZABETH "LIZ" WADE
COUNCILMEMBERS

[MUNICIPAL SEAL]

ATTEST:

CARRIE E. WARD, CMC/AAE

MOTIONED BY: D. Wilson

SECONDED BY: D. Schnyer

E. RODGERS	aye
D. SCHNYER	aye
D. WILSON	aye
S. BLUE	aye
E. WADE	aye

REVIEWED FOR LEGALSUFFICIENCY

CITY ATTORNEY
CITY OF RIVIERA BEACH

DATE 5/24/01

RESOLUTION NO. 79-01

A RESOLUTION OF THE CITY COUNCIL OF THE CITY OF RIVIERA BEACH, PALM BEACH COUNTY, FLORIDA, AUTHORIZING THE MAYOR AND CITY CLERK TO ACCEPT GRANT AND EXECUTE A MAINTENANCE MEMORANDUM OF AGREEMENT WITH THE FLORIDA DEPARTMENT OF TRANSPORTATION FOR LANDSCAPING AND IRRIGATION IMPROVEMENTS ON BLUE HERON BOULEVARD FROM GARDEN ROAD TO AVENUE S; AND PROVIDING FOR AN EFFECTIVE DATE.

WHEREAS, Keep Palm Beach County Beautiful, Inc. (KPBCB) administers matching grants for thoroughfare landscape beautification projects on or contiguous to designated state and county thoroughfares in Palm Beach County; and

WHEREAS, In February, 2001, the City was awarded a matching grant from KPBCB for landscaping and irrigation improvements to Blue Heron Boulevard from Garden Road to Avenue S; and

WHEREAS, the City desires to beautify this thoroughfare; and

NOW THEREFORE, BE IT RESOLVED BY THE CITY OF RIVIERA BEACH, PALM BEACH COUNTY, FLORIDA AS FOLLOWS:

SECTION 1. That the Mayor and City Clerk are authorized to execute a Maintenance Memorandum of Agreement with the Florida Department of Transportation for landscaping and irrigation improvements on Blue Heron Boulevard from Garden Road to Avenue S.

SECTION 2. This resolution shall take effect immediately upon its passage.

PASSED AND APPROVED this 6th day of June, 2001

APPROVED:

MICHAEL D. BROWN, MAYOR

EDWARD RODGERS, CHAIRPERSON

DAVID SCHNYER, CHAIR PRO-TEM

{MUNICIPAL SEAL}

DONALD R. WILSON

SYLVIA LEE BLUE

ATTEST:

ELIZABETH "LIZ" WADE
COUNCIL MEMBERS

CARRIE E. ARD, MC/AAE
CITY CLERK

Motioned By D. Wilson
Seconded By D. Schnyer

E. Rodgers	aye
D. Schnyer	aye
D. Wilson	aye
S. Blue	aye
L. Wade	aye

Reviewed as to Legal Sufficiency

City Attorney
City of Riviera Beach
Date: 5/18/01

/ljs

DISTRICT FOUR (4)
HIGHWAY BEAUTIFICATION GRANT AND
MAINTENANCE MEMORANDUM OF AGREEMENT
DSF-REIMB
CONTRACT NUMBER AK300
Palm Beach MPO 2000/2001

THIS AGREEMENT, made and entered into this day of _, by and between the **STATE OF FLORIDA DEPARTMENT OF TRANSPORTATION**, a component agency of the State of Florida, hereinafter called the **"DEPARTMENT"** and the **CITY OF RIVIERA BEACH** a political subdivision of the State of Florida, existing under the Laws of Florida, hereinafter called the **"AGENCY"**.

WITNESSETH

WHEREAS, as part of the continual updating of the State of Florida Highway System, the Department, for the purpose of safety, protection of the investment and other reasons, has constructed and does maintain a **six (6)** lane highway facility as described in Exhibit "A" attached hereto and incorporated by reference herein, within the corporate limits of the **AGENCY**; and

WHEREAS, the **AGENCY** is of the opinion that said highway facility that contains landscape medians and areas outside the travel way to the right of way line, excluding sidewalk, shall be maintained by periodic trimming, cutting, mowing, fertilizing, litter pick-up and necessary replanting; and

WHEREAS, the parties hereto mutually recognize the need for entering into an Agreement designating and setting forth the responsibilities of each party; and

WHEREAS, the **AGENCY** by Resolution No._____ dated, 6/2/01 attached hereto and by this reference made a part hereof, desires to enter into this Agreement and authorizes its officers to do so;

NOW THEREFORE, for and in consideration of the mutual benefits to flow each to the other, the parties covenant and agree as follows:

1. The **AGENCY** hereby agrees to install or cause to be installed landscaping on the highway facility as specified in plans and specifications included as Exhibit "B", with if any, the following exceptions and conditions:
   A. The current Florida of Department of Transportation Roadway and Traffic Design Standard index 546 must be adhered to,
   B. Clear zone/horizontal clearance as specified in the Plans Preparation Manual - Metric Volume 1, Chapter 2 must be adhered to as outlined on relevant sheets in Exhibit D,
   C. Landscaping shall not obstruct roadside signs or permitted outdoor advertising signs,
   D. If irrigation is to be installed, the Department shall be provided accurate as built plans

of the system so if in the future there is a need for the Department to perform work in the area, the system can be accommodated as much as possible,

E. If it becomes necessary to provide utilities to the median or side areas (water/electricity) it shall be the **AGENCY'S** responsibility to obtain a permit for such work though the local maintenance office

F. During the installation of the project and future maintenance operations, maintenance of traffic shall be in accordance with the 1988 edition of the MUTCD and the current Department Roadway and Traffic Design Standards (series 600),

G. The **AGENCY** shall provide the local maintenance office located at 7900 Forest Hill Boulevard, West Palm Beach, Fl 33413, a twenty-four (24) hour access telephone number and the name of a responsible person that the department may contact,

H. If there is a need to restrict the normal flow of traffic it shall be done on off peak hours (9AM to 3PM),

I .The **AGENCY** shall be responsible to clear all utilities, including the signal system communication cable, within the project limits

J. The **AGENCY** shall notify the local maintenance office forty-eight (48) hours prior to the start of the project,

2. The **AGENCY** agrees to maintain the landscaping and irrigation (if applicable) within the median and areas outside the travel way to the right of way line, excluding sidewalk and crosswalks, unless constructed with other than concrete or asphalt at the **AGENCY'S** request, by periodic trimming, cutting, mowing, fertilizing, litter pickup and necessary replanting, following the Department's landscape safety and plant care guidelines. The **AGENCY's** responsibility for maintenance shall include all landscape/turfed areas and areas covered with interlocking pavers or similar type surfacing (hardscape) within the median, crosswalks, and areas outside the travel way to the right-of-way line on Department of Transportation right-of-way within the limits of the Project. Such maintenance to be provided by the **AGENCY** is specifically set out as follows:

To maintain, which means the proper watering and proper fertilization of all plants and keeping them as free as practicable from disease and harmful insects; to properly mulch the plant beds; to keep the premises free of weeds; to mow and/or cut the grass to a proper length; to properly prune all plants which includes (1) removing dead or diseased parts of plants, or (2) pruning such parts thereof which present a visual hazard for those using the roadway. To maintain also means removing or replacing dead or diseased plants in their entirety, or removing or replacing those that fall below original project standards. All plants removed for whatever reason shall be replaced by plants of the same size and grade as specified in the original plans and specifications. To maintain also means to keep the hardscape areas free from weeds and replacement of any areas becoming in disrepair so as to cause a safety hazard. To maintain also means to keep the header curbs that contain the hardscape in optimum condition. To maintain also means to keep litter removed from the median and areas outside the travel way of the right of way line. Plants shall be those items

which would be scientifically classified as plants and include but are not limited to trees, grass, or shrubs.

The above named functions to be performed by the **AGENCY,** shall be subject to periodic inspections by the Department. Such inspection findings will be shared with the **AGENCY** and shall be the basis of all decisions regarding payment reduction, reworking or agreement termination. The **AGENCY** shall not change or deviate from said plans without written approval of the Department.

3. If at any time after the **AGENCY** has assumed the landscaping installation and/or maintenance responsibility above-mentioned, it shall come to the attention of the Department's District Secretary that the limits or a part thereof is not properly maintained pursuant to the terms of this Agreement, said District Secretary may at his option issue a written notice that a deficiency or deficiencies exist(s), by sending a certified letter to the **AGENCY** to place said **AGENCY** on notice thereof. Thereafter the **AGENCY** shall have a period of thirty (30) calendar days within which to correct the cited deficiencies. If said deficiencies are not corrected within this time period, the Department may at its option, proceed as follows:

   (a) Complete the installation or part thereof, with Department or Contractor's personnel and deduct the cost of such work from the final payment for said work or part thereof, or

   (b) Maintain the landscaping or a part thereof, with Department or Contractor's personnel and invoice the **AGENCY** for expenses incurred, or

   (c) Terminate the Agreement in accordance with Paragraph 6 of this Agreement and remove, by Department or private contractor's personnel, all of the landscaping installed under this Agreement or any preceding agreements except as to trees and palms and charge the **AGENCY** the reasonable cost of such removal.

4. It is understood between the parties hereto that the landscaping covered by this Agreement may be removed, relocated or adjusted at any time in the future as determined to be necessary by the Department in order that the state road be widened, altered or otherwise changed to meet with future criteria or planning of the Department. The **AGENCY** shall be given sixty (60) calendar days notice to remove said landscaping/hardscapeafter which time the Department may remove the same and any mitigation required for remaining landscape/hardscape shall be the responsibility of the **AGENCY.**

5. The Department agrees to reimburse the **AGENCY** an amount not to exceed**$105,847**, as defined in Attachment "C". Subject to this limit, the Department will pay only for the following costs:

(a) Sprinkler/irrigation system

(b) Plant materials and fertilizers/soil amendments.

(c) Paver bricks, header curbs & other hardscape items.

The Department's participation in the project cost, as described in Attachment "C" is limited to only those items which are directly related to this project. Payment shall not be made until (1) certification of acceptance is received from the **AGENCY's** Landscape Architect/or designee and (2) a Department Landscape Architect and/or his designee has approved the project for final payment.

(a) Payment shall be made only after receipt and approval of goods and services as provided in Section 215.42, Florida Statutes.

(b) Any penalty for delay in payment shall be in accordance with Section 215.422(3)(b), Florida Statutes.

(c) Bills for fees or other compensation for services or expenses shall be submitted in detail sufficient for a proper preaudit and postaudit thereof, and bills for travel expenses specifically authorized by this Agreement, if any, shall be submitted and paid in accordance with the rates specified in Section 112.061, Florida Statutes.

(d) Records of costs incurred under terms of this Agreement shall be maintained and made available upon request to the Department at all times during the period of this Agreement and for three years after final payment is made. Copies of these documents and records shall be furnished to the Department upon request. Records of costs incurred includes the **AGENCY's** general accounting records, together with supporting documents and records, of the contractor and all subcontractors performing work, and all other records of the contractor and subcontractors considered necessary by the Department for a proper audit of costs.

(e) The **AGENCY** agrees to return all monies received under the terms of this Agreement, to the Department, should the landscaped area fail to be maintained in accordance with the terms and conditions of this Agreement.

6. This Agreement may be terminated under any one of the following conditions:

(a) By the Department, if the **AGENCY** fails to perform its duties under Paragraph 3, following ten (10) days written notice.

(b) By the Department, for refusal by the **AGENCY** to allow public access to all documents, papers, letters, or other material subject to the provisions of Chapter 119,

Florida Statutes and made or received by the **AGENCY** in conjunction with this Agreement.

7. The term of this Agreement commences upon execution.

8. To the extent permitted by law, the **AGENCY** shall indemnify and hold harmless the Department, its officers and employees from all suits, actions, claims and liability arising out of the **AGENCY's** negligent performance of the work under this Agreement, or due to the failure of the **AGENCY** to construct or maintain the project in conformance with the standards described in Section 2 of this agreement. Nothing contained in this section shall constitute a waiver of the City's sovereign immunity or the provisions of Section 768.28, Florida Statuutes.

9. The **AGENCY** may construct additional landscaping within the limits of the right-of-ways identified as a result of this document, subject to the following conditions:

   (a) Plans for any new landscaping shall be subject to approval by the Department. The **AGENCY** shall not change or deviate from said plans without written approval by the Department.
   (b) All landscaping shall be developed and implemented in accordance with appropriate state safety and road design standards;
   (c) The **AGENCY** agrees to comply with the requirements of this Agreement with regard to any additional landscaping installed;
   (d) No change will be made in the payment terms established under item number five (5) of this Agreement due to any increase in cost to the **AGENCY** resulting from the installation of landscaping added under this item.

10. This writing embodies the entire Agreement and understanding between the parties hereto and there are no other Agreements and understanding, oral or written, with reference to the subject matter hereof that are not merged herein and superseded hereby.

11. The Department, during any fiscal year, shall not expend money, incur any liability, or enter into any contract which, by its terms, involves the expenditure of money in excess of the amounts budgeted as available for expenditure during such fiscal year. Any contract, verbal or written, made in violation of this subsection is null and void, and no money may be paid on such contract. The Department shall require a statement from the Comptroller of the Department that funds are available prior to entering into any such contract or other binding commitment of funds. Nothing herein contained shall prevent the making of contracts for periods exceeding 1 year, but any contract so made shall be executory only for the value of the services to be rendered or agreed to be paid for in succeeding fiscal years; and this paragraph shall be incorporated verbatim in all contracts of the Department which are for an amount in excess of $25,000.00 and which have a term for a period of more than 1 year.

12. The Department's District Secretary shall decide all questions, difficulties and disputes of any nature whatsoever that may arise under or by reason of this Agreement, the prosecution or fulfillment of the service hereunder and the character, quality, amount and value thereof; and his decision upon all claims, questions and disputes shall be final and conclusive upon the parties hereto.

13. This Agreement may not be assigned or transferred by the **AGENCY** in whole or part without the consent of the Department.

14. This Agreement shall be governed by and construed in accordance with the laws of the State of Florida. In the event of a conflict between any portion of the Agreement and Florida law, the laws of Florida shall prevail.

IN WITNESS WHEREOF, the parties hereto have caused these presents to be executed the day and year first above written.

AGENCY

By: _____
Mayor or Chairman

Attest: _____ **(SEAL)**
Deputy City Clerk

_____
Legal Approval

STATE OF FLORIDA
DEPARTMENT OF TRANSPORTATION

By: _____
for: District Secretary

Attest: _____ **(SEAL)**
Executive Secretary

_____
Legal Approval

SECTION NO.	93012
FIN NO.(s):	41090215801
COUNTY:	Palm Beach
S.R. NO.:	708

EXHIBIT "A"

PROJECT LOCATION

State Road 708 (Blue Heron Boulevard) from Canal 17 easterly to Avenue "S" within the right-of-way area

SECTION NO.: 93012
FIN NO.(s): 41090215801
COUNTY: Palm Beach
S.R. NO.: 708

EXHIBIT "B"

The Department agrees to reimburse the AGENCY for the installation of the project as reflected in the plans attached hereto and incorporated herein.

RESOLUTION NO. 80-01

A RESOLUTION OF THE CITY COUNCIL OF THE CITY OF RIVIERA BEACH, PALM BEACH COUNTY, FLORIDA, AUTHORIZING THE ENGINEERING FIRM OF SHALLOWAY, FOY, RAYMAN & NEWELL, INC. TO PROVIDE CONSTRUCTION ADMINISTRATION AND FIELD INSPECTIONS FOR WEST 35TH STREET RECONSTRUCTION AND CITYWIDE SIDEWALKS PROJECT AND PROVIDING FOR AN EFFECTIVE DATE.

WHEREAS, the work for reconstructing West 35th Street from Avenue O to Old Dixie Highway has been awarded to Select Contracting, Inc.; and

WHEREAS, the installation of sidewalks has been awarded to Select Contracting, Inc. and ARZ Builders, Inc.; and

WHEREAS, the City desires to inspect the construction work for West 35th Street Reconstruction and Sidewalk Installation Projects to ensure compliance with the approved plans and specifications.

NOW THEREFORE, BE IT RESOLVED BY THE CITY OF RIVIERA BEACH, PALM BEACH COUNTY, FLORIDA AS FOLLOWS:

SECTION 1. The engineering firm of Shalloway, Foy, Rayman and Newell, Inc. is authorized to provide construction administration and field inspections for West 35th Street reconstruction and the Citywide Sidewalk Project.

SECTION 2. The Finance Director is authorized to make payment from the following accounts:

Account No. 108-0716-5190-5304 not to exceed $25,000
Account No. 402-1437-5330-4606 not to exceed $10,000
Account No. 305-1116-5190-6304 not to exceed $40,000

SECTION 3. This resolution shall take effect immediately upon its passage.

PASSED AND APPROVED this 6th **day of** June**, 2001**

APPROVED:

MICHAEL D. BROWN, MAYOR

EDWARD RODGERS, CHAIRPERSON

DAVID SCHNYER, CHAIR PRO-TEM

{MUNICIPAL SEAL}

DONALD R. WILSON

SYLVIA LEE BLUE

ATTEST:

ELIZABETH "LIZ" WADE
COUNCIL MEMBERS

CARRIE E. ARD, MC/AAE
CITY CLERK

Motioned By D. Wilson
Seconded By D. Schnyer

E. Rodgers	aye
D. Schnyer	aye
D. Wilson	aye
S. Blue	aye
L. Wade	aye

Reviewed as to Legal Sufficiency

City Attorney
City of Riviera Beach
Date: 5/22/01

/ljs